This document is the property of Nian-Yeong Corporation and is delivered on the express condition that it is not to be disclosed, reproduced or used, in whole or in part, for manufacture or sale by anyone other than Nian-Yeong Corporation without its prior consent, and that no right is granted to disclose or to use any information in this document.

CUSTOMER DRAWING

REV.	DESCRIPTION	APPROVED BY	DATE	ECN NO.
A	RELEASE	Fido Weng	22/03/10'	
B				
C				

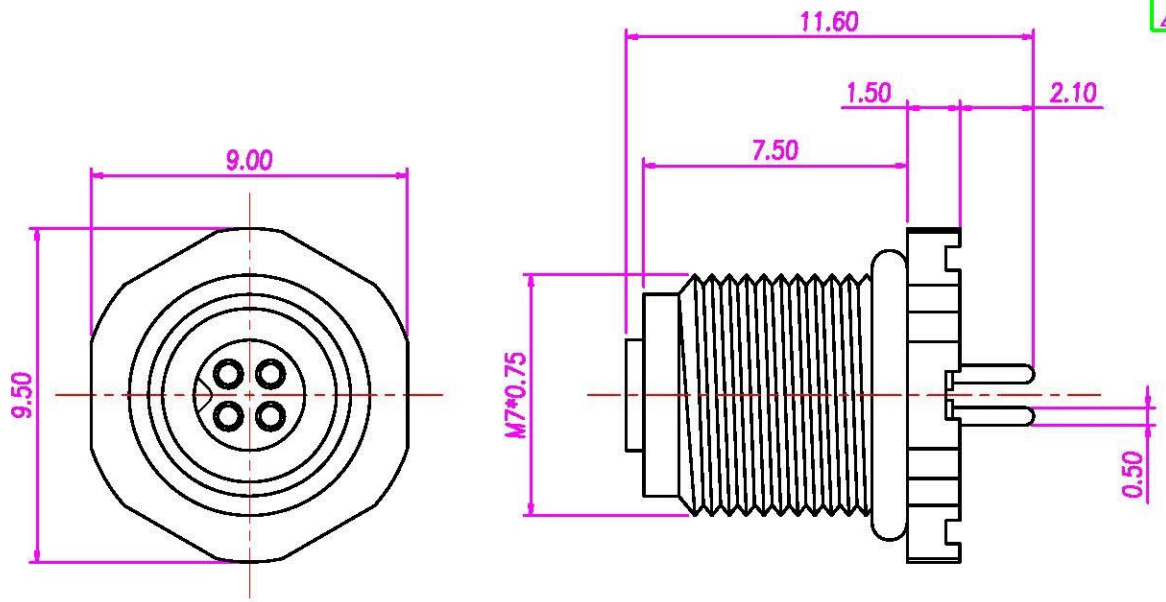

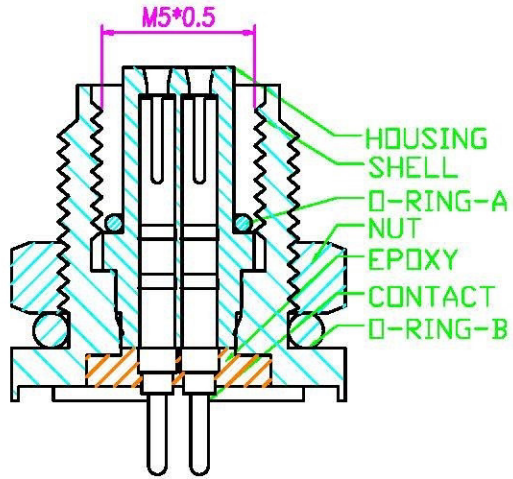

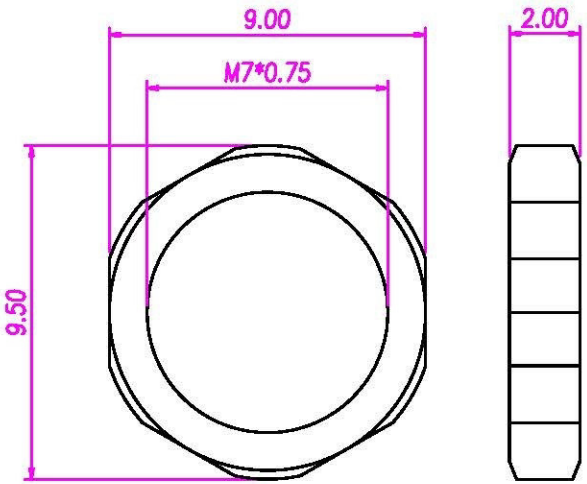

NUT

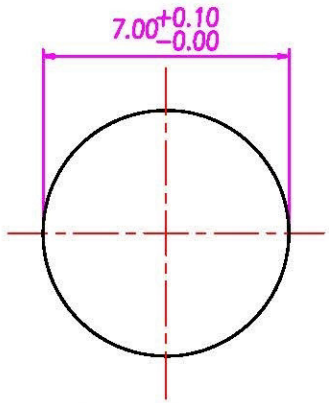

RECOMMENDPANEL CUT-OUT

1. MATERIAL :
   - 1-1. HOUSING : PBT UL94V-0; COLOR : BLACK
   - 1-2. CONTACT : PHOSPHOR BRONZE
   - 1-3. NUT : BRASS
   - 1-4. SHELL : BRASS
   - 1-5. O-RING : NBR ; COLOR : BLACK
   - 1-6. EPOXY BASE : EF400A & EF400B. COLOR : BLACK
2. FINISH :
   - 2-1. CONTACT : GOLD FLISH MICRO INCHES MIN.
   - 2-2. NUT : NICKEL PLATED.
   - 2-3. SHELL : NICKEL PLATED.
3. ELECTRICAL SPECIFICATION :
   - 3-1. Rated current : 1A
   - 3-2. Rated Voltage : 60V
   - 3-3. Water proof: IP67
4. Environmental :
   - 4-1. Operation Temperature : -20 ℃~85℃

DRAWN	Ku Chou	APP'D	Fido Weng	UNIT	mm	TOLERANCE x ±0.20, xx ±0.10, xxx ±0.05, xxxx ±0.03, ANGULA ±1°	All Connectors	TITLE	M5*0.5 4PIN(F)###		SHEET
CHK'D	Emily Suen			SCALE	1/1		www.allconnectors.de Tel.: 0049 711 7069503 20794 Filderstadt - Germany info@allconnectors.de Fax: 0049 711 7069501 Kellermeadi. 25	PART NO.	WP-04F2-51	DWG NO. QC4689	VERSION A