RoHS
IP67

REV	DESCRIPTION	DATE
A	ISSUE	NOV/10/2008

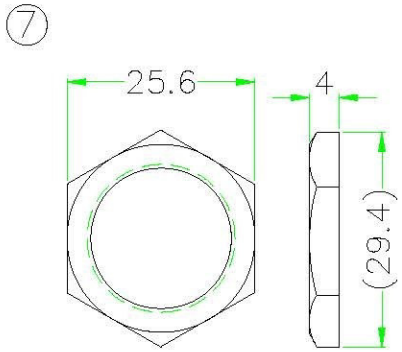

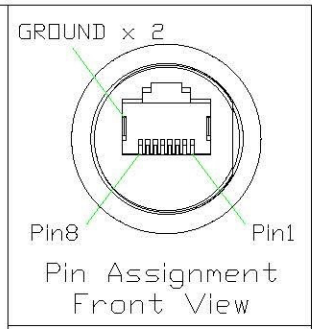

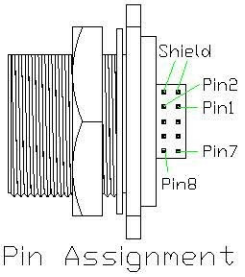

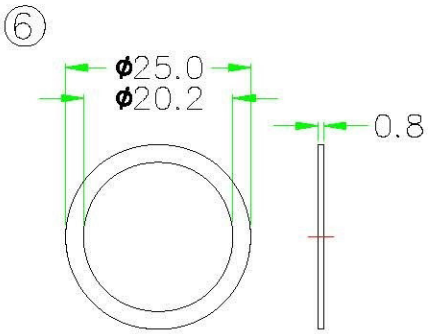

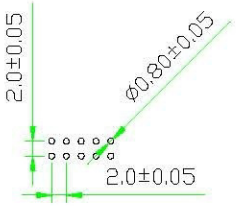

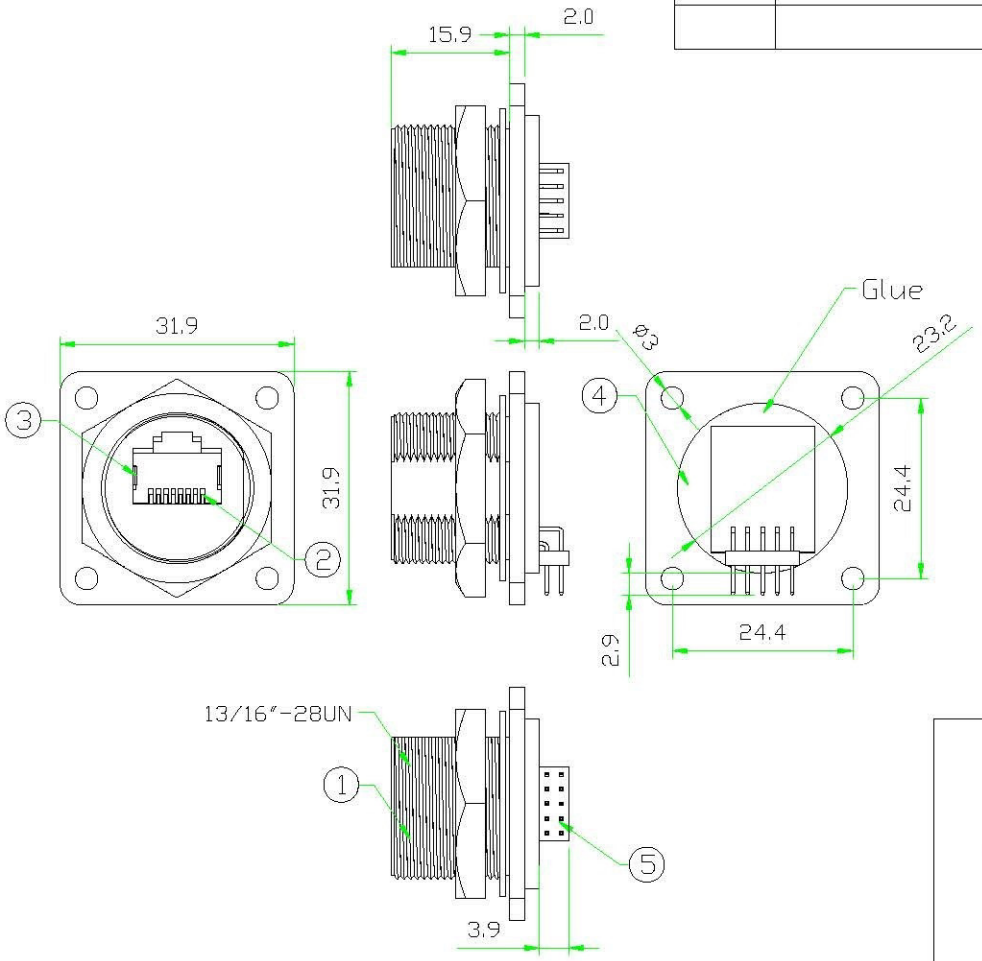

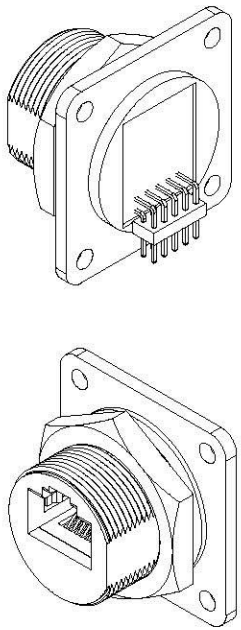

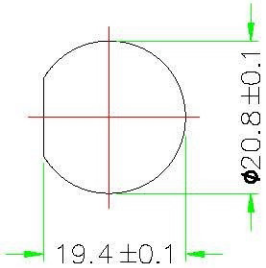

RECOMMEND PANEL HOLE

No.	PART NAME	DESCRIPTION	COLOR	Q'TY	REMARKS
7	HEX NUT	NYLON+GF.	BLACK	1	RJ45-HNUT (42-135-N8)
6	GASKET	EPDM.	BLACK	1	CCA-G
5	CONNECTOR	RIGHT ANGLE PIN HEADER, PITCH 2.0mm, 5P*2ROW.	BLACK	1	2.0PH-52PR
4	PCB	FR4 . DOUBLE SIDE, 1.0mm THICKNESS.		1	RJ45-PCB
3	GROUND	GROUND CONTACT. SUS301.		2	RJ45-PLATE
2	CONTACT	RJ45 PIN CONTACT. Phos. Bronze 50u" gold plating.		8	RJ45J-180
1	CONNECTOR	RJ45 JACK CONNECTOR BODY. NYLON+GF.	BLACK	1	

All Connectors
www.allconnectors.de
Tel.: 0049 711 7009504
70794 Filderstadt - Germany
info@allconnectors.de
Fax: 0049 711 7009504
Kettemerstr. 2?

UNIT: mm
SCALE 1:1
UNLESS OTHERWISE SPECIFIED TOLERANCES:
X ±0.25 XX ± 0.1
XXX ± 0.05 ANGLE ± 1øX
REV. A
SHEET 1/1

TITLE : RJ45 JACK C SIZE PANEL CONNECTOR SCREW & SQUARE FLANGE TYPE PIN HEADER R/A PIN

P/N: RJ45C-JPSRS

DWG.NO: RJ45C-JPSRS

DR. jack
CH. michael
AP.