All Connectors
www.allconnectors.de
Tel.: 0049 711 7009503
70794 Filderstadt - Germany
info@allconnectors.de
Fax: 0049 711 7009504
Kettemerstr. 25

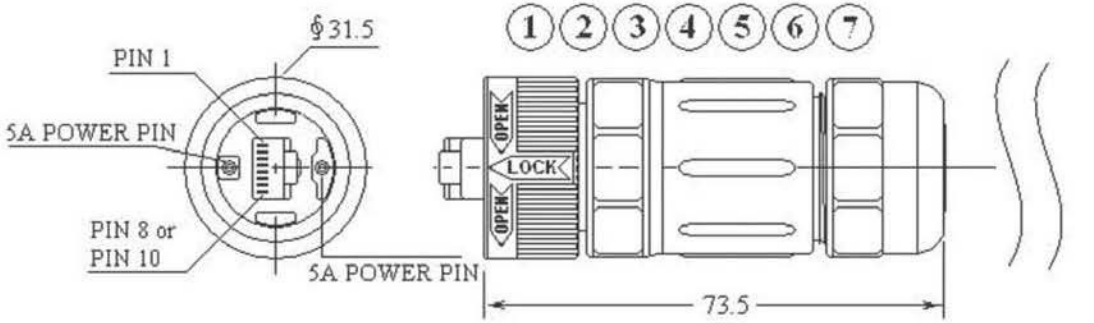

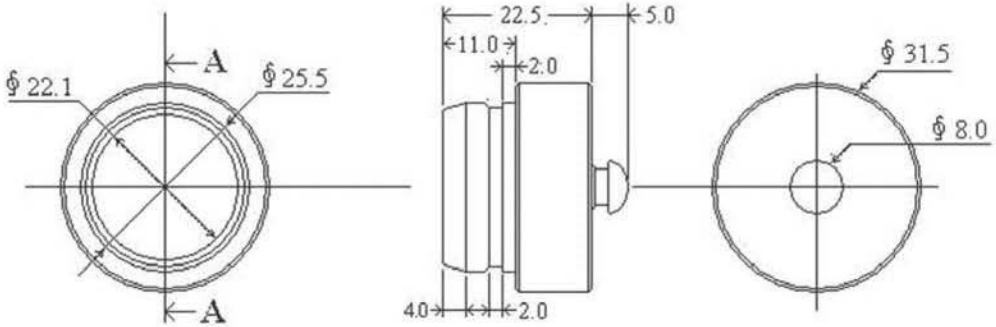

Note :
Waterproof Rate : IP 68
UV Resist

Accessory: PLUG (Metal Shell Type) 8P8C*1pcs ;
O-RING

Packing Method: 1 set of bag

Dust Cover
Material EPDM Black

7	Housing	Nylon + GF Black
6	Housing	Nylon + GF Black
5	Wire Clip	Nylon Black
4	Gasket	EPDM Black
3	Female Terminal	Phosphor bronze 250V / 5A
2	RJ45	Shielded Plug 8Pin
1	Housing	Nylon + GF Black

REVISION	DESCRIPION	REVISED BY	TOLEANCES .X± .XX± ANGLE ½°					UNIT mm	PART NAME	RJ45 Plug, Wire Flexible Assembly Type	DWG NO
4			DRAWN BY	Jelly	DESIGNED BY	Eric	SCALE				WS1776A
3											
2			CHECKED BY		APPROVED BY		DATE	2012. 02. 07	PART NO	A46912006	
1 2012. 02. 07	換新圖框, 重新出圖	Jelly									