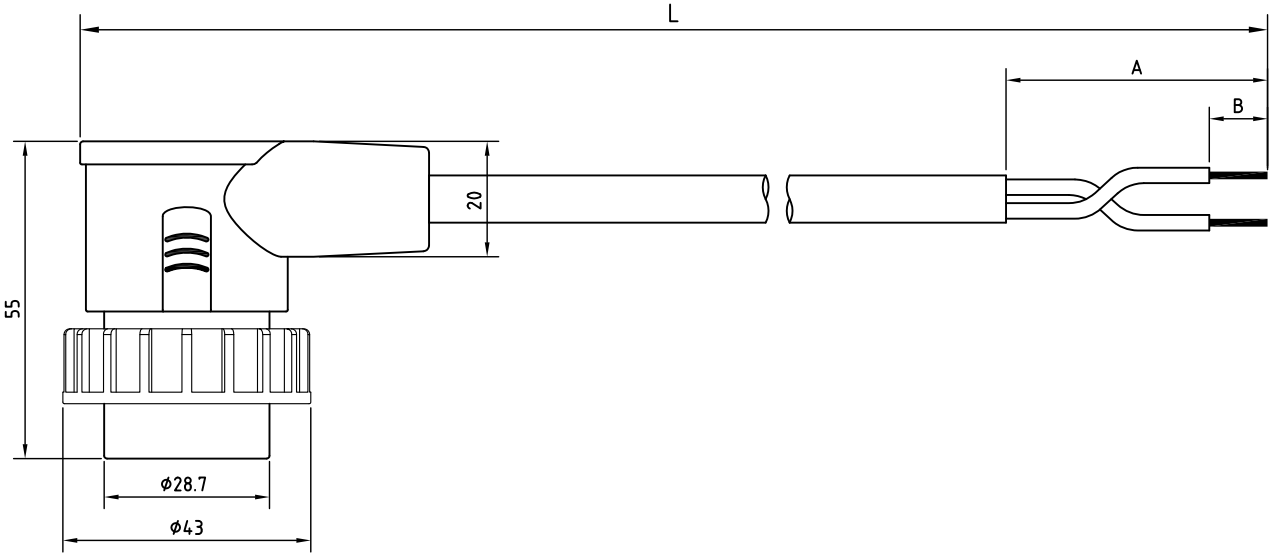

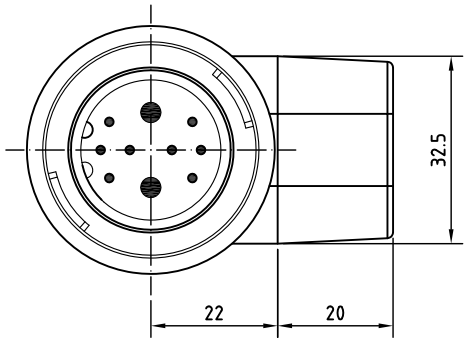

Specification of connector

General Characteristics

Locking system	: snap-in
Shell protection	: IP67

Electronical Characteristics

Rated voltage	: 250V
Rated current	: Large pin 40A Small pin 10A
Contact resistance	: Large pin ≦1mΩ Small pin ≦1.5mΩ

Materials

Pin contact	: brass
Contact plating	: gold
Male insert	: PA
Ring nut	: PA
O-ring	: rubber

Specification of cable

Matrial Jacket	PVC	PUR

RoHS
LEAD FREE

All Connectors
www.allconnectors.eu | info@allconnectors.eu
Tel. +49 (0)711 / 358 110 20 | Fax +49 (0)711 / 358 110 25

DATE	8/16/2011	PART NO.	D257M1-XP
DWN	GINA	REV.	0
CHK			
UNIT	MM		

ITEM	High Power