No	Part Name	Material	Final
1	Housing	Nylon-9T,Color: Blue	
2	1~4 Pin Contact	Phosphor Bronze,t=0.25	
3	5~9 Pin Contact	Brass,t=0.25	
4	Shell	Brass	Nickel Plated
5	Pear Shell	SPCC	Nickel Plated

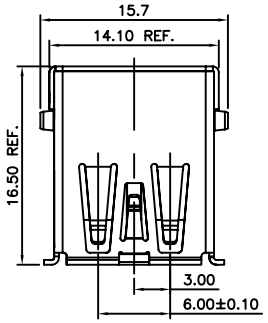

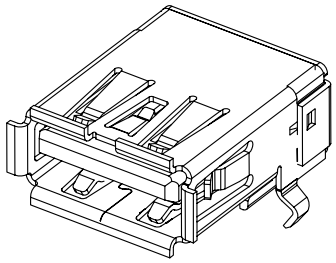

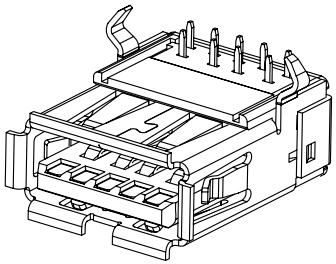

Material and Finish:

1.Insulator Material: Nylon-9T,UL94V-0,Color:Blue
2.Contact A Material: Brass
3.Contact B Material: Phosphor Bronze
4.Contact Plated:
Contact Area Plated: 30u" Gold Plated
Solder tails Area Plated: 100u" Tin Plated
Underplate: 80u" Nickel Plated
5.Shell Material: Brass
6.Shell Plated: 80u" Nickel Plated
7.Rear Shell Material: SPCC
8.Rear Shell Plated: Nickel Plated
9.ELECTRICAL REQUIREMENTS:
CONTACT RESISTANCE: 30mOhms max. initial for VBUS and GND contact
50mOhms max. initial for all othet contacts
DIELECTRIC STRENGTH:750Volts AC(RMS)
INSULATION RESISTANCE:100 MOhms minimun.
CONTACT CURRENT RATING:1.8A max. (PIN1,PIN4)all Other contacts 0.25A min.
10.MECHANICAL REQUIREMENTS:
INSERTION FORCE:35N max.
EXTRACTION FORCE:10N min. initial,8N
after the specified insertion/extraction or durability cycles.

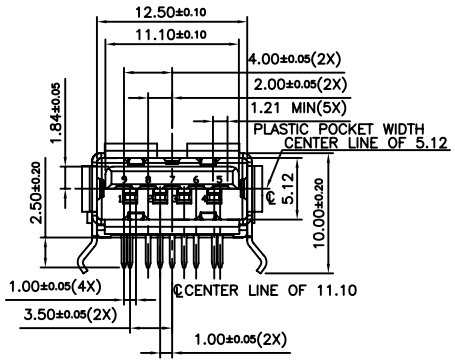

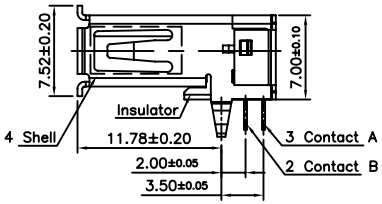

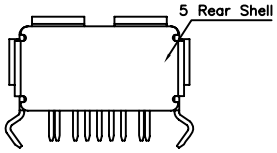

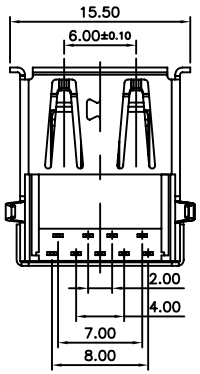

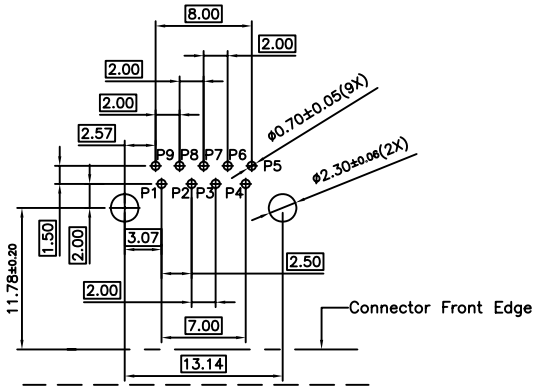

Recommanded P.C.B Layout

Pin Assignments	
Pin No.	Signal Name
1	VBUS
2	D-
3	D+
4	GND
5	StdA_SSRX-
6	StdA_SSRX+
7	GND_DRAIN
8	StdA_SSTX-
9	StdA_SSTX+
Shell	Shield

Product Number	Description
209B-DG01	USB3.0 A Receptacle, DIP Standard Type ,30u″ Gold Plating

UNLESS OTHERWISE SPECIFIED TOLERANCE
ANG. ±5°
0. ±0.3
.0 ±0.25
.00 ±0.20

All Connectors
www.allconnectors.eu | info@allconnectors.eu
Tel. +49 (0)711 / 358 110 20 | Fax +49 (0)711 / 358 110 25

SCALE: AS SHOWED	UNIT: mm		
DRAWN Willis	2010/03/29	DRAWN NAME: USB 3.0 A Receptacle DIP Standard Type	
CHECKED Angel	2010/03/29		
APPROVED Ken	2010/03/29	PRODUCT NO. 209B-DG01	
SIZE A4	REV.	FILE NAME: 209B-DG01_B_1	

REV.	DESCRIPTION	DATE