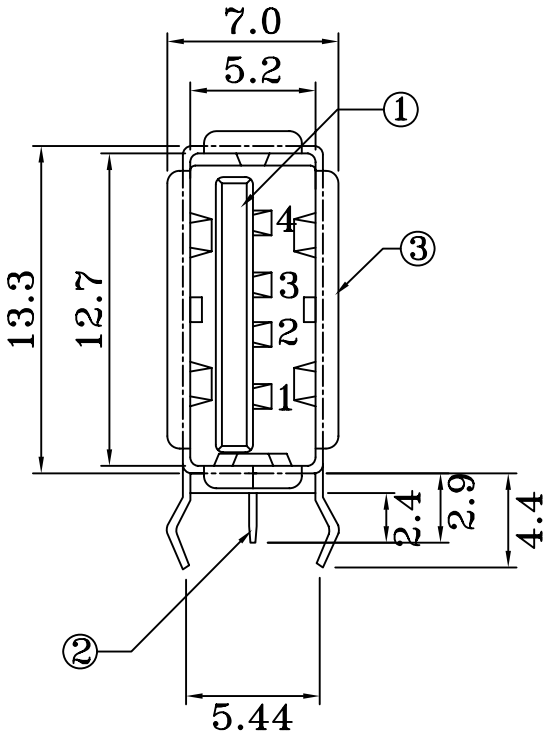

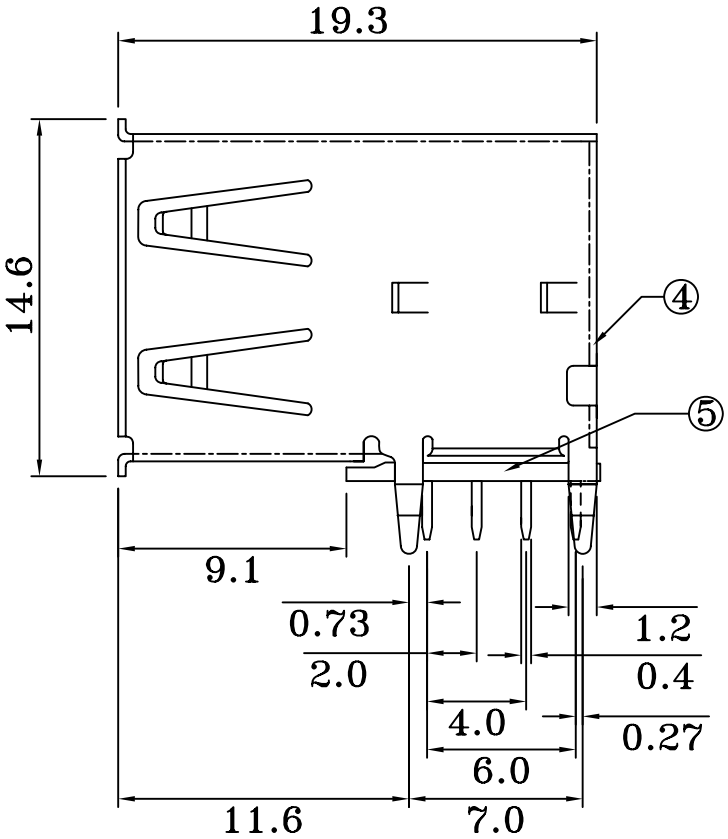

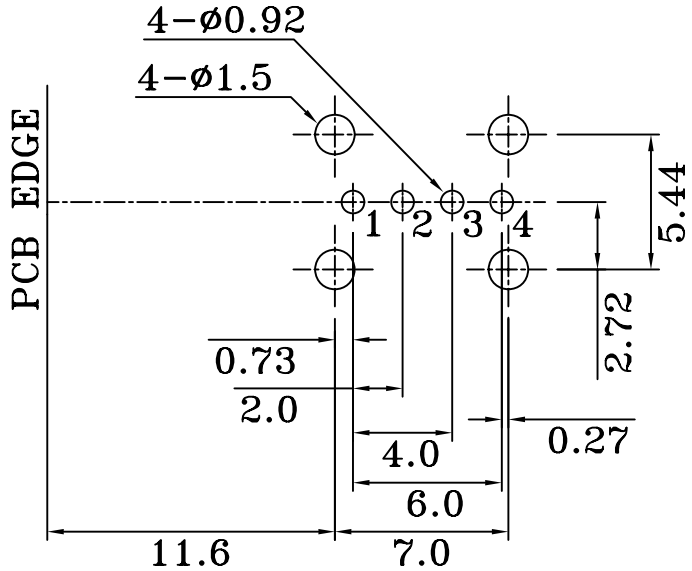

PCB LAYOUT
(BOTTOM VIEW)

205F−D A N 0−R
1 2 3 4 5

1.Type
D:DIP solder tail
DIP board lock

2.Contact Plating
A:Gold flash

3.Shell Plating
N:Nickel plated

4.0:Top mount

5.RoHS

NO.	NAME	MATERIAL	FINISH	REMARK	Q'TY
1	HOUSING	P.B.T. G.F.	WHITE		1
2	PIN TERM.	PHOS. BRONZE T:0.25	GOLD/TIN PLATED	Gold Flash 1~3u"; NI:40~60 ; TIN:120	4
3	SHELL	BRASS T:0.3	NICKEL PLATED	NI:80~120 μ"	1
4	SHELL	SPCC T:0.3	NICKEL PLATED	NI:80~120 μ"	1
5	BOTTOM COVER	P.B.T. G.F.	WHITE		1

REV.	DESCRIPTION	DATE

UNLESS OTHERWISE SPECIFIED TOLERANCE
ANG. ±5'
0. ±
.0 ±0.25
.00 ±0.20

SCALE: AS SHOWED | UNIT: mm

DRAWN willis 2009/01/05

CHECKED / /

APPROVED / /

SIZE A4 | REV.

All Connectors
www.allconnectors.eu | info@allconnectors.eu
Tel. +49 (0)711 / 358 110 20 | Fax +49 (0)711 / 358 110 25

DRAWN NAME: USB A Receptacle
4P Flank DIP Type

PRODUCT NO. 205F−DAN0−R

FILE NAME: 205F−DAN0−R