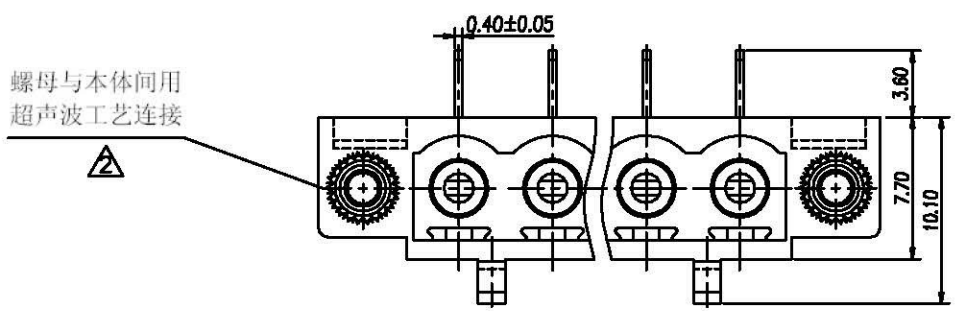

TBH051-SR19E-xx-LF

LEADFREE

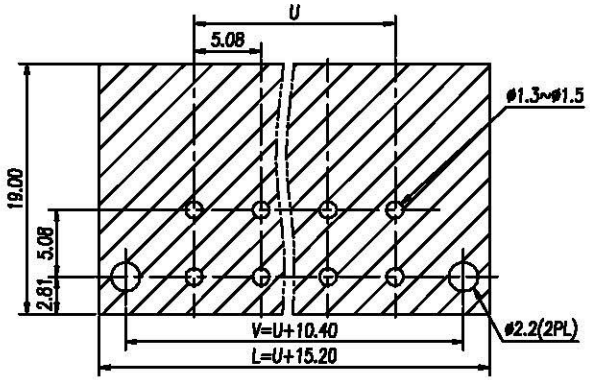

P.C.B. LAYOUT

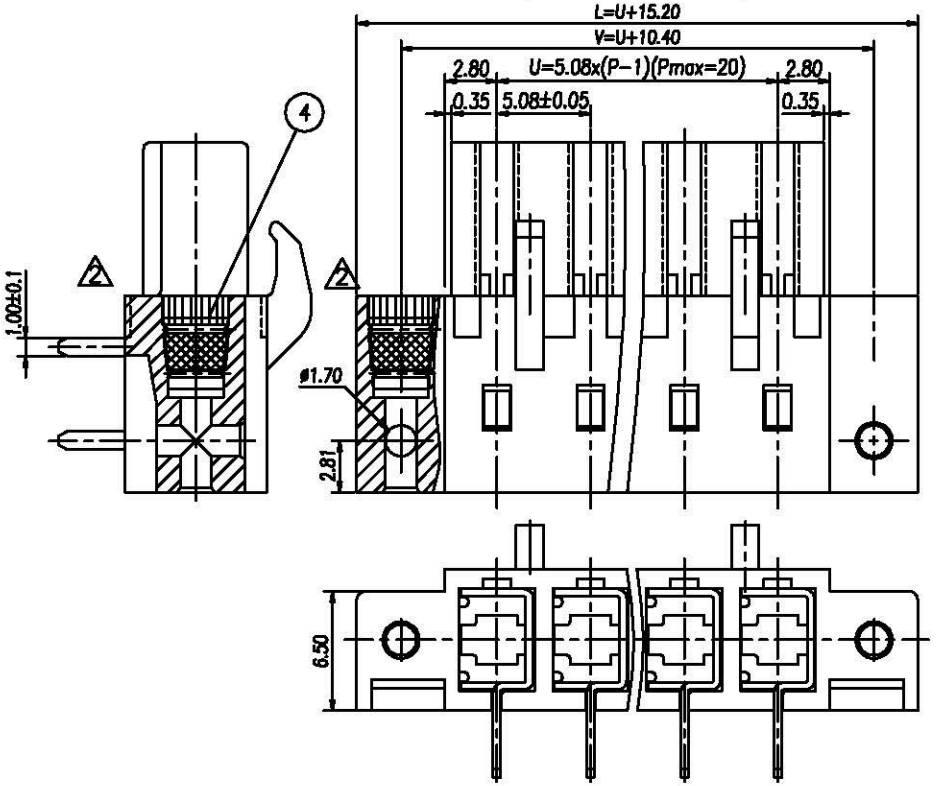

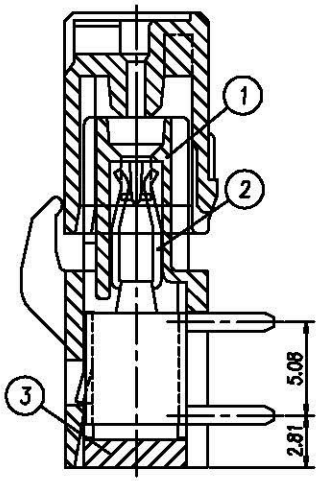

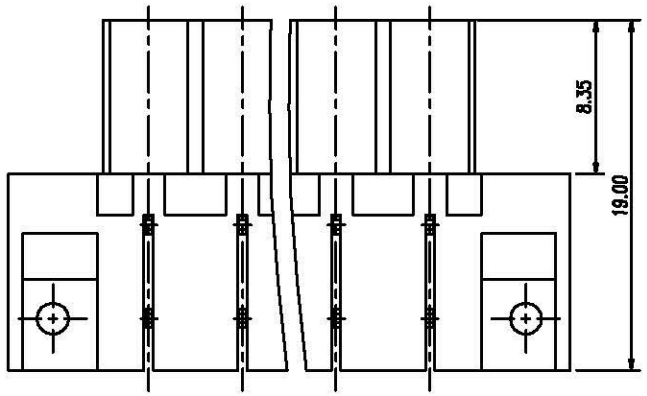

NOTES:
1. Rating: 300V 10A
   PITCH: 5.08mm
2. Insulation Withstands Voltage:
   AC 2000V/MIN
3. Insulation Resistance:
   500M Ω or more at DC500V
4. Using Temperature Range:
   -40°C~+105°C
5. Suitable Electric Wire: AWG 22~14

ITEM	NAME OF PART	NO. OF PAP	Q'TY	MATERIAL	NOTES
4	SCREW.NUT	S000029400	2	背铜	M2.5
3	COVER	0121L5X000	P	PA66	G001
2	CLAMP	0121B00600	P	MSP1-H	Tin Plated
1	HOUSING	0121G0X000	1	PA66	G001

P	2	3	4	5	6	7	8	9	10	11
U	5.08	10.16	15.24	20.32	25.40	30.48	35.56	40.64	45.72	50.80
V	15.48	20.56	25.64	30.72	35.80	40.88	45.96	51.04	56.12	61.20
L	20.28	25.36	30.16	35.52	40.60	45.68	50.76	55.84	60.92	66.00
P	12	13	14	15	16	17	18	19	20	
U	55.88	60.96	66.04	71.12	76.20	81.28	86.36	91.44	96.52	
V	66.28	71.36	76.44	81.52	86.60	91.68	96.76	101.84	106.92	
L	71.08	76.16	81.24	86.32	91.40	96.48	101.56	106.64	111.72	
Tolerances for PITCH ERROR										

RoHS Compliant

All Connectors
www.allconnectors.de
Tel.: 0049 711 2099500
70794 Filderstadt - Germany
Info@allconnectors.de
Fax: 0049 711 2099504
Kellenmersh. 25

DRAWING BY CY	TOLERANCES ARE
CHECKED BY GENIUS	X. ±
UNIT / mm SCALE 1 : 1	.X ±
DATE	.XX ±
SIZE A4 PPOJECTION	.XXX ±
	ANG ±

ORDER INFORMATION

TBH051-SR19F-xx-LF

SERIES | DIP 90° FEMALE | HIGH 19.0mm FLANGE | 02~20WAY | LEADFREE

DESCRIPTION: