REV	MODIFICATION	DATE	DRAW
B	EN-11-1116	2011/11/23	Chris
C	EN-12-0321	2012/03/27	Chris

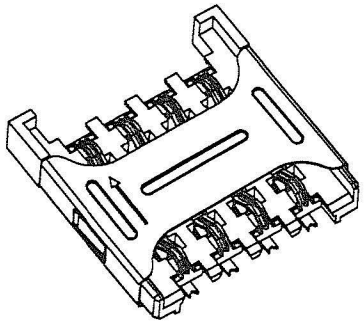

Signal interface connections for SIMMP-00XXXB033-Gare shown below.

Contact No	Assignment	Description
C1	Vcc	Power Voltage
C2	RST	Reset Signal
C3	CLK	Clocking signal
C4	RFU	Reserve for feature use
C5	GND	Power and Signal Ground
C6	Vpp	Programming Voltage
C7	I/O	Serial Data input/output
C8	RFU	Reserve for feature use

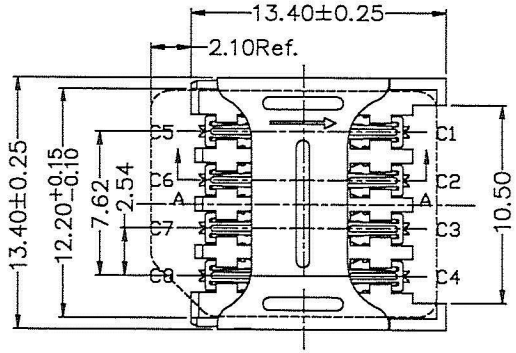

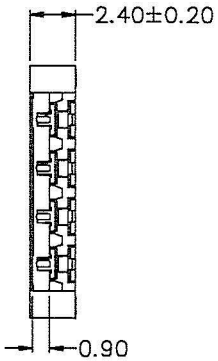

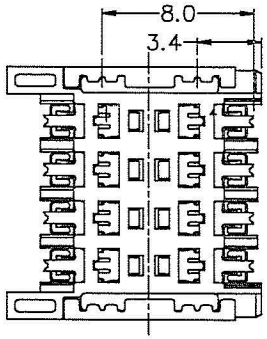

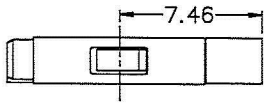

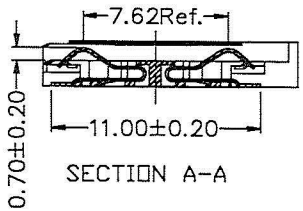

SECTION A-A

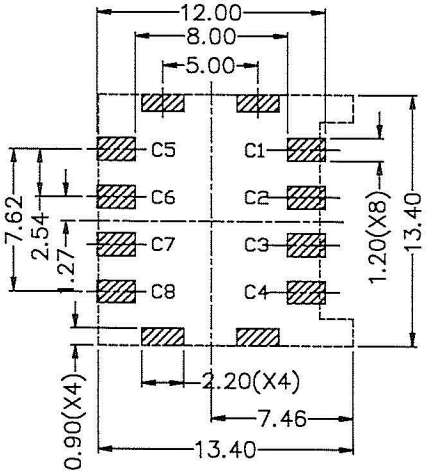

RECOMMENDED P.C.B LAYOUT
COMPONENT SIDE(TOLERANCE ±0.05)

THCHNICAL CHARACTERISTICS

1.General Characteristics
- Dimensions: 13.40Lx13.40Wx2.40H mm
- Weight: Approx. 0.5±0.1g
- Durability: 5,000 cycles min.

2.Electrical Characteristics
- Contact resistance: 50 mΩ typical,100 mΩ max.
- Insulation resistance: >1000 megaohms /500 VDC

3.Solderability
- Vapor phase: 215°c,30 sec. MAX.
- IR reflow: 250°c,10sec. MAX.
- Manual soldering: 370°C,3 sec. MAX.

4.Environmental Characteristics
- Operating temperature: -40°C~+85°C
- Operating humidity: 10%~95%RH

KINGFONT 金峰精密 APR 06 2012 ISSUE R&D Dept.

Order Information:

SIMMP-00 X XX B033- G

- X: 6:6 pins / 8:8 pins
- XX: PLATING 01:GOLD FLASH
- G: COMPLY TO RoHS

DIMENSION IN mm [Inch]		PROD. SPEC.	AllConnectors
TOLERANCE UNLESS OTHERWISE SPECIFIED		PKG. SPEC.	TITLE MICRO SIM CARD / CUSTOMER DRAWING
.X± 0.25	X.°± 2°	APPROVE	FILE NO. / DWG NO. SIMMP-00XXXB033-G
.XX± 0.20	.X°± 1°	CHECK	SIZE A4 / PROJ. / SHEET 1/1
.XXX± 0.10	.XX°±	DRAW	SCALE 1:1 / REV C

QR-2100-043