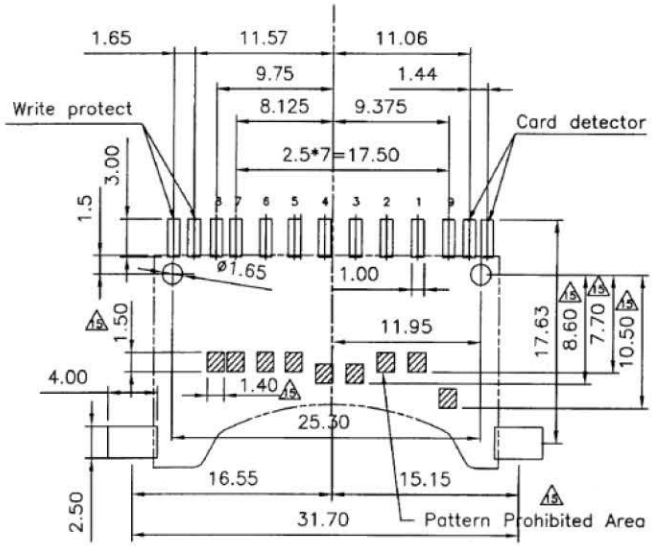

RECOMMENDED P.C.B LAYOUT
TOLERANCES: ±0.05mm

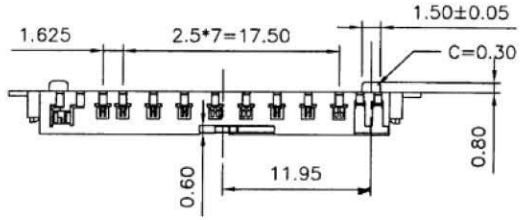

SPECIFICATION
MATERIAL
Insulator: Thermal Plastic UL94V-0
Contacts: Copper Alloy
Boardlock: Copper Alloy
CONTACT PLATING
Underplate: 50u"~100u" Nickel
Contact Area: 1u"~30u" Selective Gold
Solder Tails Area: 100u"~200u" Tin/Lead or
100u"~200u" Tin(Lead Free)
ELECTRICAL
Current Rating: 1 Amps Max.
Contact Resistance: 100 mohms Max.
Insulation Resistance: 1000 Mohms Min.
MECHANICAL
Mating Cycle: 10000 Cycles Minute
Operating temperature: -40°C To +85°C

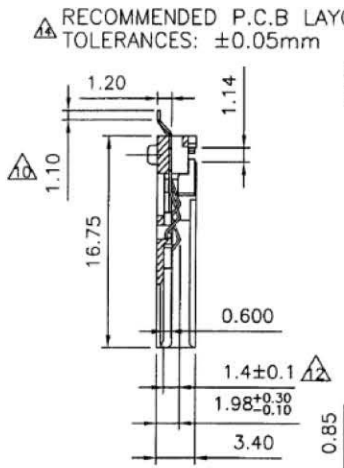

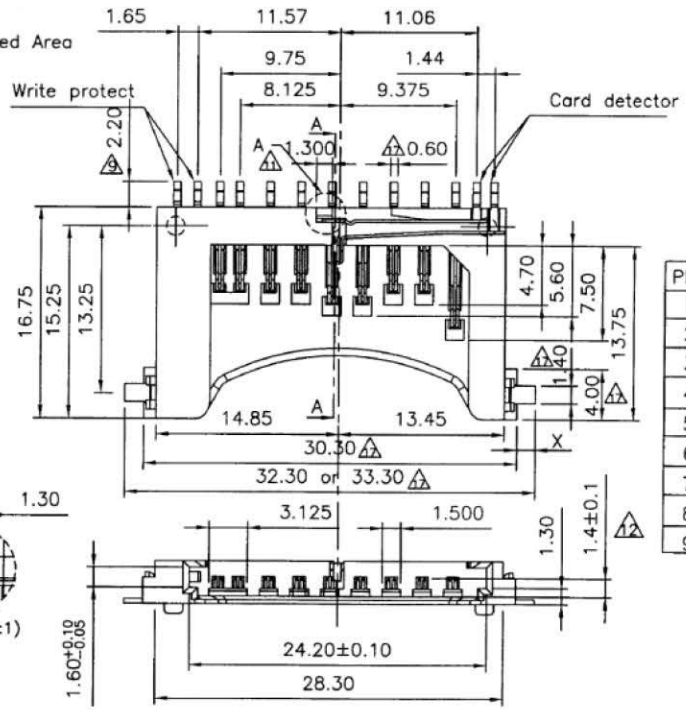

PIN#	NAME
1	CD/DAT3
2	CMD
3	VSS1
4	VDD
5	CLK
6	VSS2
7	DAT0
8	DAT1
9	DAT2

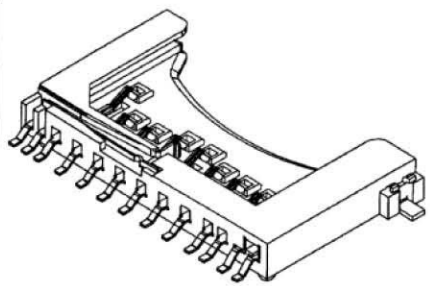

RoHS Compliant

All Connectors
www.allconnectors.de
Tel.: 0049 711 7008503
Info@allconnectors.de
Fax: 0049 711 7009504
Kellermeisterstr. 25
70771 Leinfelden - Germany

DRAWING BY CY	
CHECKED BY GENIUS	
UNIT / mm	SCALE 1 : 1
DATE	
SIZE A4	PPOJECTION

TOLERANCES ARE
X ± 0.50
.X ± 0.30
.XX ± 0.20
.XXX ±
ANG ± 5°

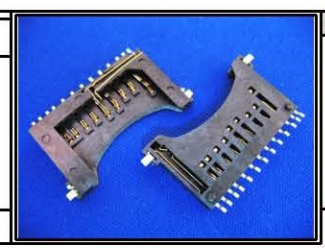

ORDER INFORMATION

SDC-W25XB-09-LF

SERIES
90°SMT
POST TO POST 25.3mm
NON PUSH
B TYPE
09WAY
LEADFREE

DESCRIPTION: