Notes: (1). Material:
Insulator: LCP+30% G.F., UL 94V-0 rated,Color Black.
Contact: Phosphor Bronze
(2). Plating:
Contact Area: Hard gold plating over 1.27 um(50u")min Nickel underplating.
Soldering Zone: 3.05um(120")min.100% Tin,or Lead-free plating per part number designation, over Nickel underplating.
Underplating: 1.27 um (50u")min. Nickel allover.

CIRCUIT without CARD

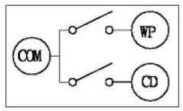

CARD INSERTED

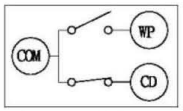

●Write Protect SW. : Lock
●Status: Read only

CARD INSERTED

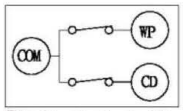

●Write Protect SW. : Unlock
●Status: Write enable

TABLE I

料號	Standoff	"L"
SDC-W24PB20B00-09	0.0mm	2.75mm
SDC-W24PB20B15-09	1.5mm	4.25mm
SDC-W24PB20B18-09	1.8mm	4.55mm
SDC-W24PB20B20-09	2.0mm	4.75mm

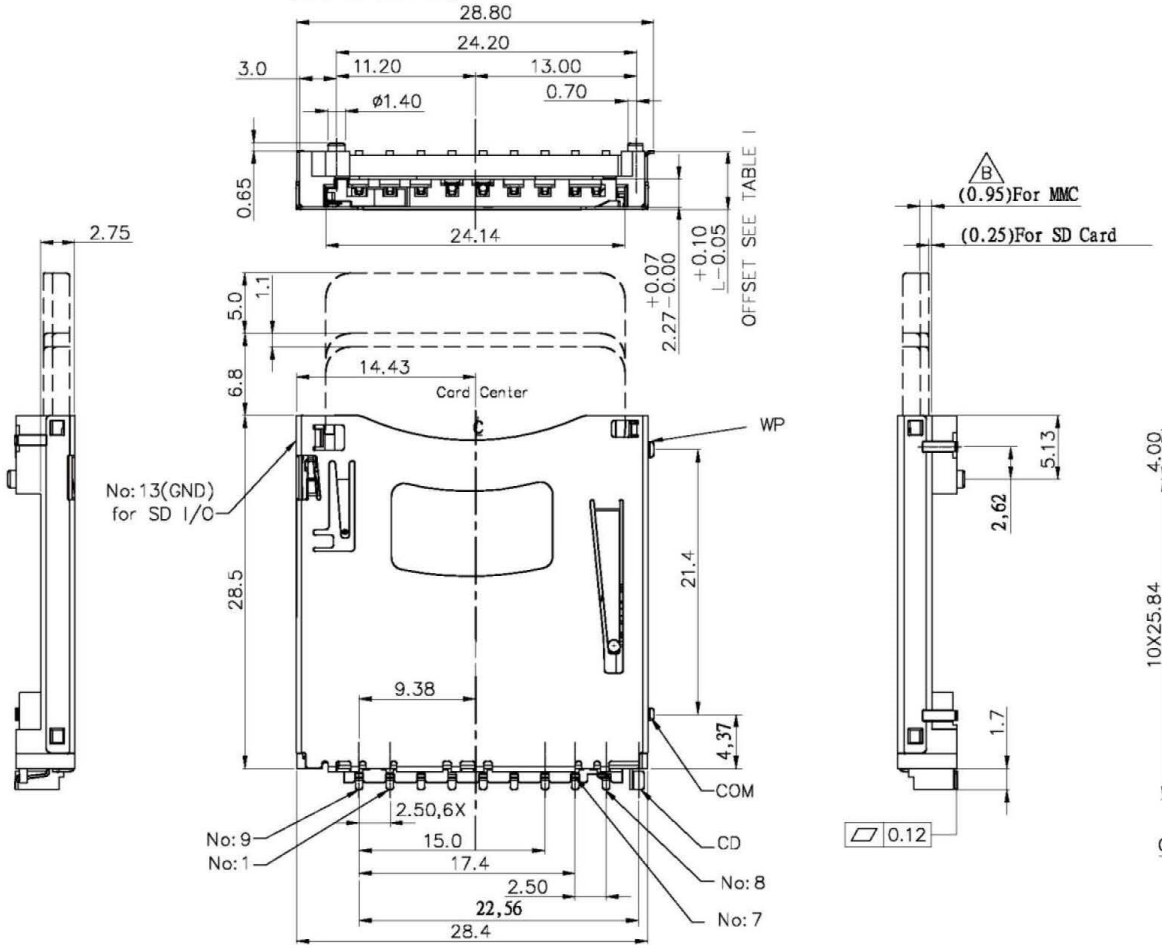

Recommended P.C.Board Layout-STYLE 1

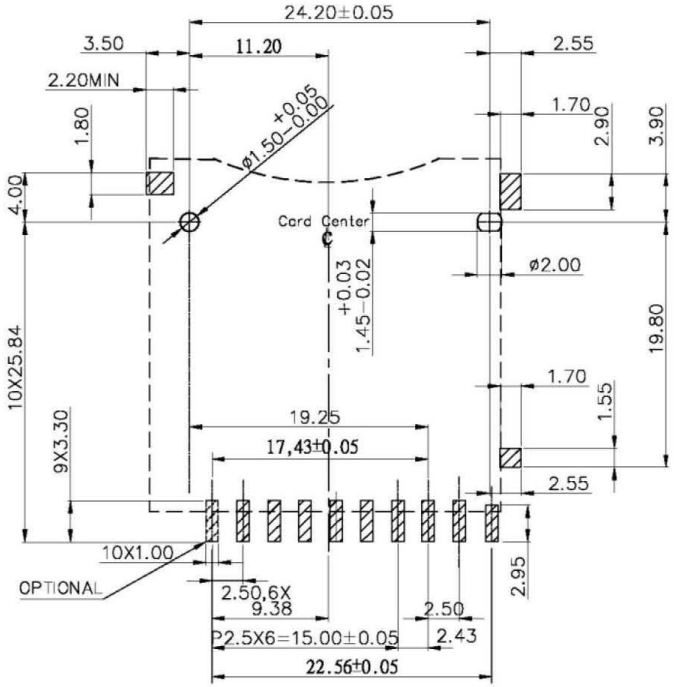

RoHS Compliant

AllConnectors
www.allconnectors.de
Tel.: 0049 711 7009503
70794 Filderstadt - Germany
info@allconnectors.de
Fax: 0049 711 7009504
Kettemerstr. 25

DRAWING BY CY		TOLERANCES ARE
CHECKED BY GENIUS		X. ±
UNIT / mm	SCALE 1 : 1	.X ± 0.30
DATE		.XX ± 0.20
SIZE A4	PPOJECTION	.XXX ±
		ANG ± 3°

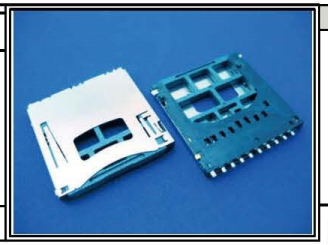

ORDER INFORMATION

SDC-W24PB20Bxx-09-LF

SERIES
90°SMT
POST TO POST 24.0mm
PUSH PUSH
B TYPE
EAR/POST 2.62mm
00:0.0mm STANDOFF
15:1.5mm STANDOFF
18:1.8mm STANDOFF
20:2.0mm STANDOFF
09WAY
LEADFREE

DESCRIPTION: