REMARK : RoHS REQUIREMENT APPLIED
(符合RoHS)

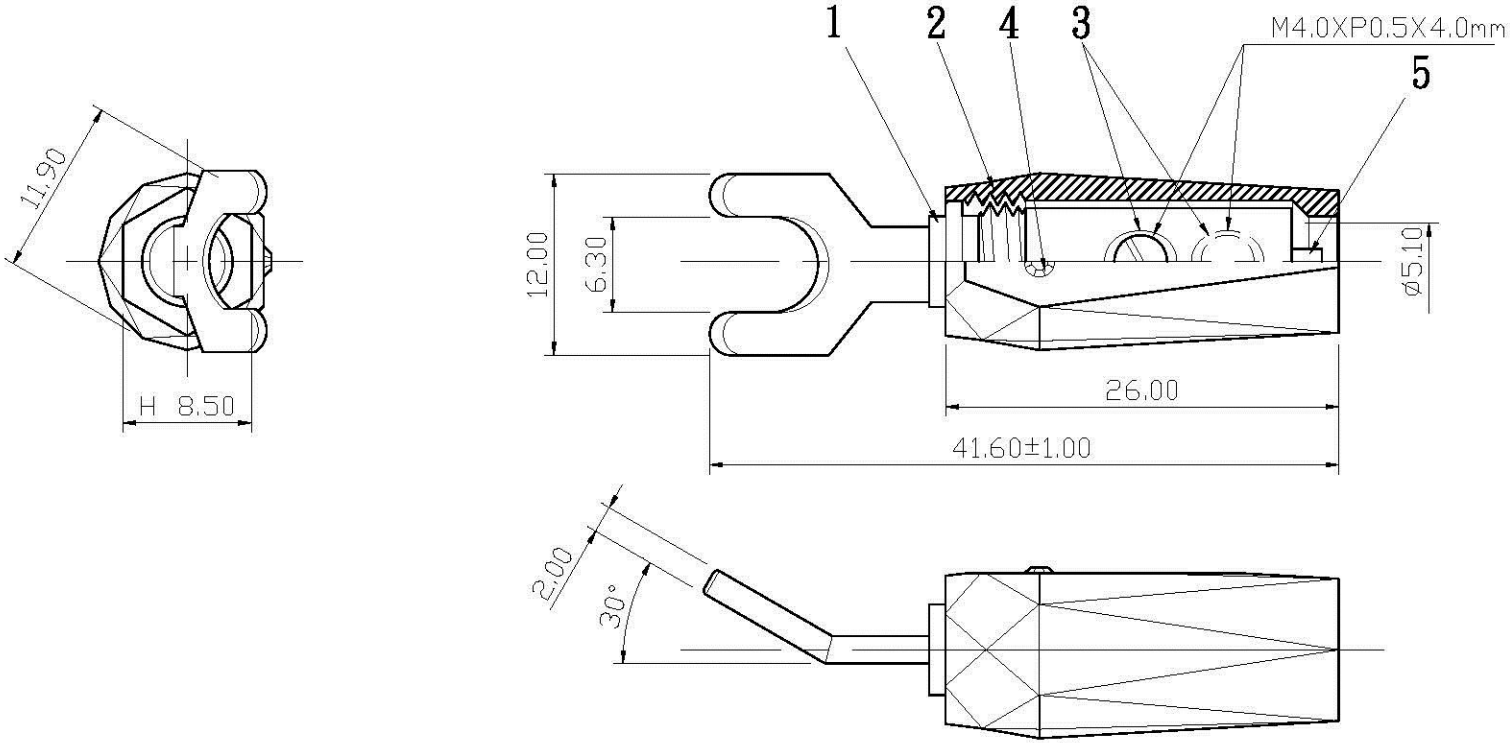

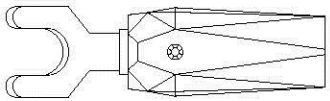

S 1 : 1

NO.	Description	Unit	Materials	Finish	Drawing No.
7					
6					
5	sleeve	1	pvc	transparent	
4	swarovski	1	crystal	white	
3	screw	2	brass	gold	SCREW-104G-M4XP0.5X4.0mm
2	shell	1	brass	satin gold	
1	body	1	brass	gold	

DIMENSIONS ARE IN MILLIMETERS

UNLESS OTHRWISE PECIFIED TOLERANCES
(一般公差)
0.5~6 = ±0.2
>6~30 = ±0.4
>30~120 = ±0.6
>120~315 = ±1
>315~1000 = ±1.6
ANGLES(角度) = ±5°

SCALE 2 : 1 UNIT MM

CHECKED

DRAWN *Lala*

DATE 2010. 02. 02

All Connectors
www.allconnectors.de
Tel.: 0049 711 7009503
70794 Filderstadt - Germany
info@allconnectors.de
Fax: 0049 711 7009504
Kettemerstr. 25

TITLE CABLE TERMINAL

DRAWING NO. CT-401SGG-6.3-30-5.1

FILE NO. DRAWING\AUDIO\CT\CT-401SGG-6.3-30-5.1