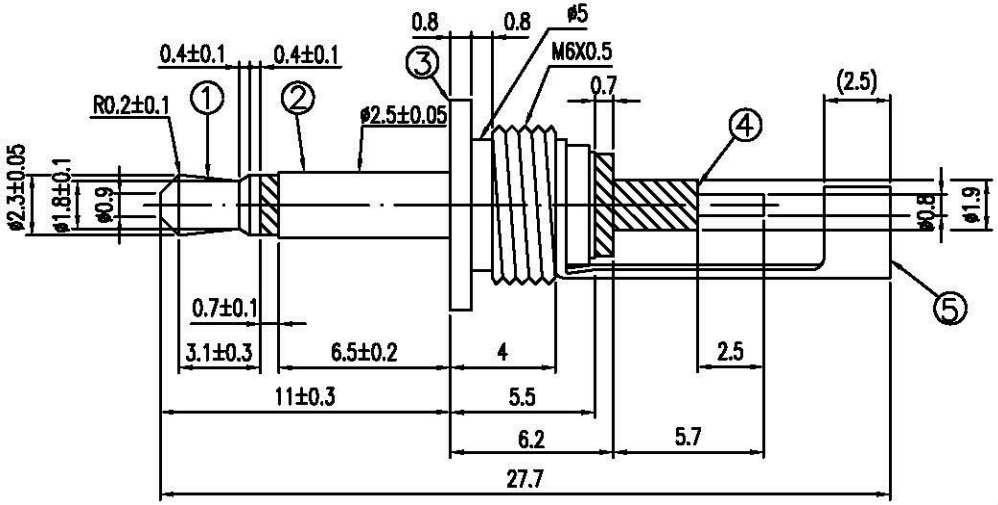

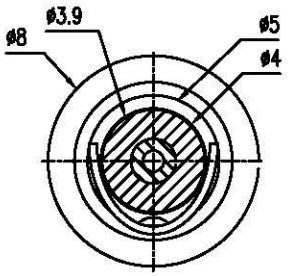

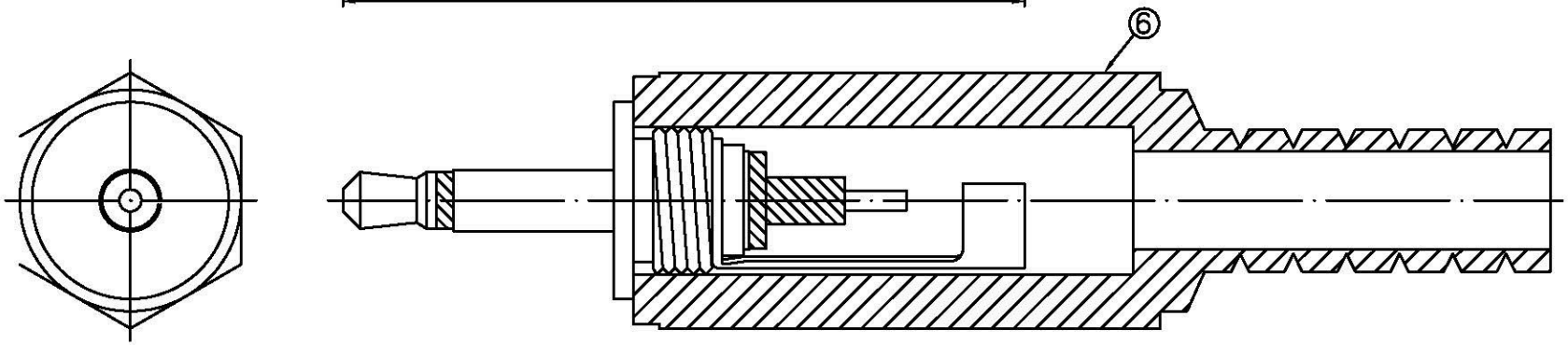

PART NO.	MATERIAL	PLATING
1.	BRASS	NICKEL
2.	BRASS	NICKEL
3.	BRASS	NICKEL
4.	P.P	BLACK
5.	BRASS	NICKEL
6.	P.E	BLACK

RoHS Compliant

All Connectors

www.allconnectors.de
info@allconnectors.de
Tel.: 0049 /11 /009609
Fax: 0049 /11 /009604
70794 Filderstadt - Germany
Kettemerstr. 25

DRAWING BY CY	
CHECKED BY GENIUS	
UNIT / mm	SCALE 1 : 1
DATE	
SIZE A4	PPOJECTION

TOLERANCES ARE
X. ±
.X ±
.XX ±
.XXX ±
ANG ±

ORDER INFORMATION

EP-A-02-LF

SERIES — ASSEMBLY — 02WAY — LEADFREE

DESCRIPTION: ***2.5MP Assy type***