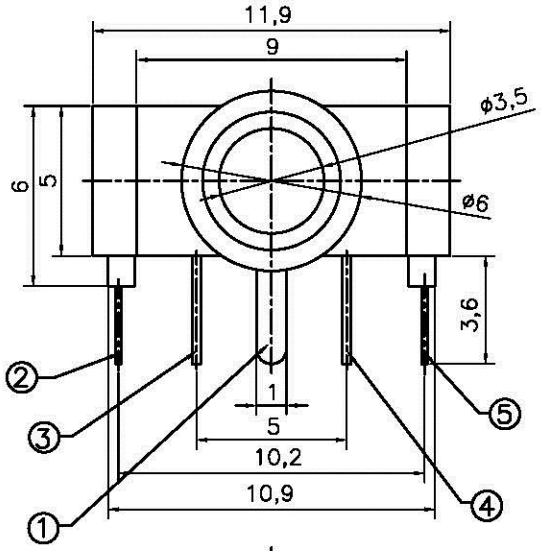

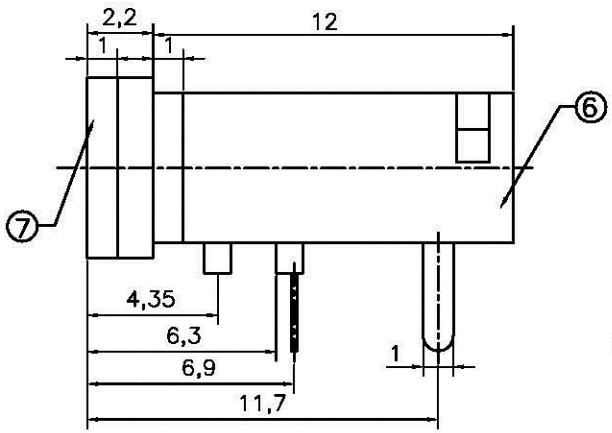

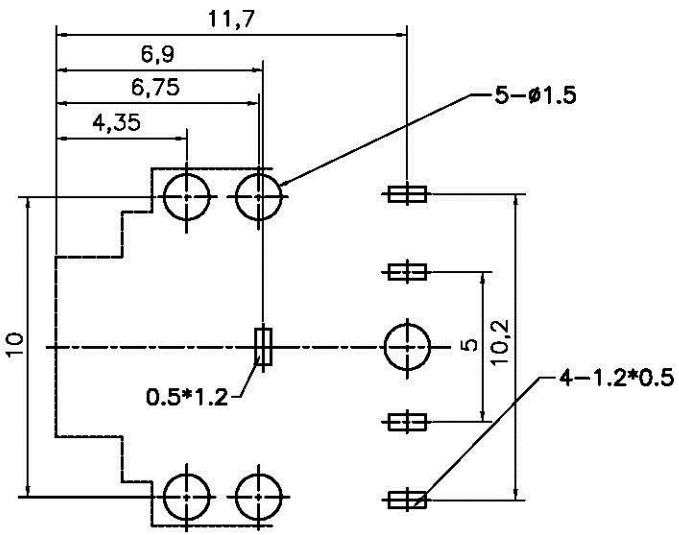

P.C.B. HOLE LAYOUT
(BOTTOM VIEW)

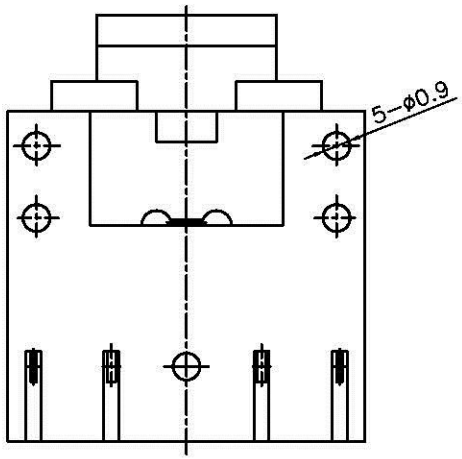

MODEL NO.	PJ–R125–05C	PJ–R125–04CR	PJ–R125–04CL	PJ–R125–03	PJ–R125–03B	PJ–R125–02
SCHEMATIC	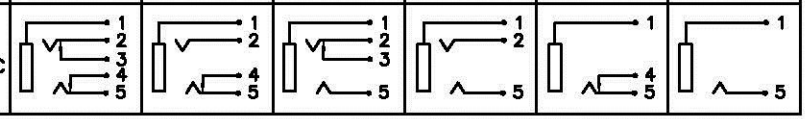					

NO.	NAME	MATERIAL	FINISH
7	FERRULE	BRASS	Ni PLATED
6	BODY	P.B.T.	BLACK
5	TERMINAL 4	PHOSPHOR BRONZE t=0.2	Pb–Sn PLATED
4	TERMINAL 3	BRONZE t=0.3	Pb–Sn PLATED
3	TERMINAL 2	BRONZE t=0.3	Pb–Sn PLATED
2	TERMINAL 1	PHOSPHOR BRONZE t=0.2	Pb–Sn PLATED
1	EARTH TERMINAL	BRONZE t=0.2	Pb–Sn PLATED

All Connectors
www.allconnectors.de
Tel.: 0049 711 7002503
70794 Filderstadt - Germany
info@allconnectors.de
Fax: 0049 711 7002504
Kettemerstr. 25

PART NO. PJ-R125-xx			
DWG NO. PJ-R125-xx	APPROVED BY CY	TOLERANCES ARE .X ±0.2 .XX ±0.05 .XXX AWG	DESCRIP TION:
FILE NO.	DRAWING BY		
UNIT / mm	SCALE 1 : 1	PROJECTION	AREA / REVISIONS / HK / DATE