REV.	ECN.	DATE	DWN	APVD

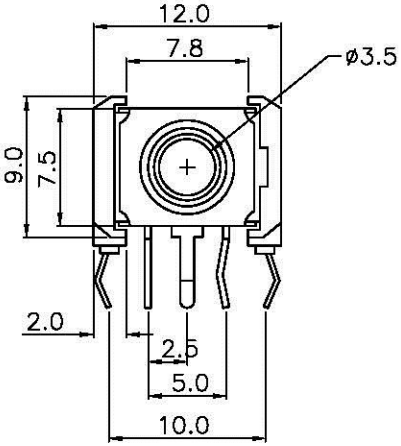

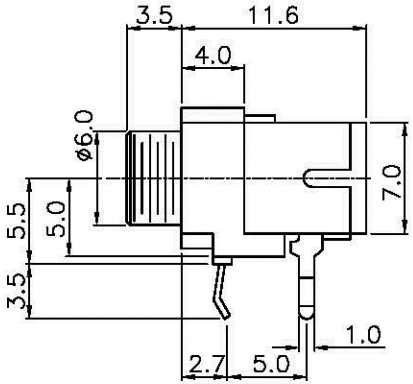

SPECIFICATION:

CURRENT RATING : DC 12V, 2A MAX.
AC 100V, 1A MAX.
DIELECTRIC WITHSTANDING VOLTAGE : 500V AC PER MINUTE
INSULATION RESISTANCE : 100MΩ MIN. AT 500V DC.
CONTACT RESISTANCE : 30mΩ MAX.

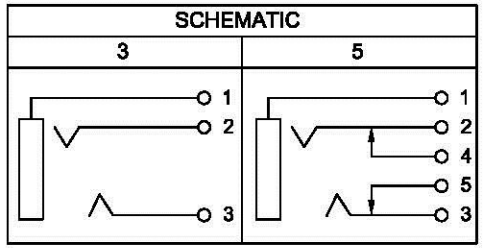

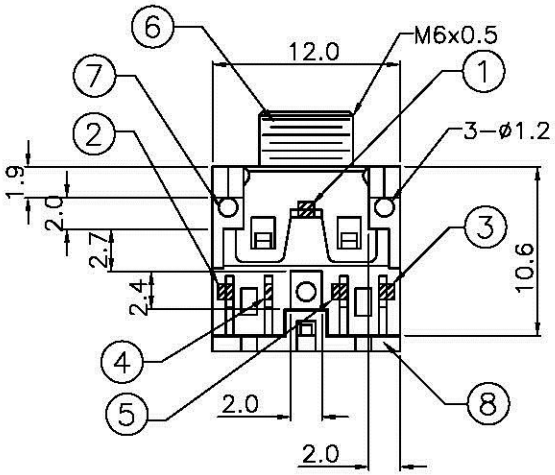

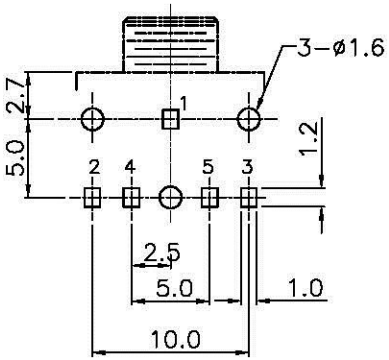

PCB LAYOUT
(BOTTOM VIEW)

Order Information :

JE B 05 - 5 4 T 1 B 1 0 - R
1 2 3 4 5 6 7

1. SERIES NUMBER	JEB05 :ø3.5mm EARPHONE JACK
2. SCHEMATIC OPTION	3 , 5 (SEE ABOVE DRAWING)
3. TERMINAL PLATING	T : TIN
4. INSULATOR COLOR	1 : BLACK
5. INSULATOR MATERIAL	B : PBT
6. BUSHING PLATING	1 : NICKEL
7. GREEN PRODUCT	BLANK : NOT GREEN PRODUCT R : RoHS COMPLIANT

NO.	NAME	MATERIAL	FINISH
1	GROUND TERM.	C.R.S. T=0.5	TIN PLATED
2	RING SPRING	PBS T=0.3	TIN PLATED
3	TIP SPRING	PBS T=0.3	TIN PLATED
4	RING BREAK	BRASS	TIN PLATED
5	TIP BREAK	BRASS	TIN PLATED
6	PLUG BUSHING	BRASS	NICKEL PLATED
7	HOUSING	PBT	BLACK
8	BACK COVER	PBT	BLACK

All Connectors
www.allconnectors.de
Tel.: 0049 711 7009503
70791 Filderstadt - Germany
info@allconnectors.de
Fax: 0049 711 7009504
Kettemerstr. 25

SIZE	UNIT	SCALE.	SHEET.
A4	mm	2 / 1	1 OF 1

GENERAL TOLERANCE
± 0.3
ANGLE TOLERANCE ± 1°
RADIUS ± 0.25
HOLE ± 0.13

DRAWN.	JEAN	DATE	01 - 24 - 2006
CHECKED.	JEAN	DATE	02 - 09 - 2006
APPROVED.	JEAN	DATE	02 - 09 - 2006

DRAWING NO.	JEB05-X4T1B10-R	C11010	
TITLE.	ø3.5mm EARPHONE JACK		
PART NO.	JEB05-X4T1B10-R	REV	A.0