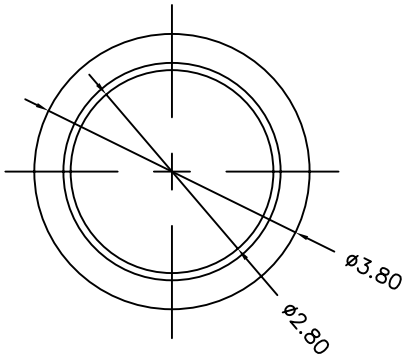

NOTE:
1. MATERIAL&FLASH/PLATED
   1.1 TOP PROBE: BRASS
       PLATING: GOLD 5u" MIN ON ALL
   1.2 BOTTOM PROBE: BRASS
       PLATING: GOLD 3u" MIN ON ALL
   1.3 CAP: HIGH TEMP. THERMOPLASTIC
       UL94V-0,COLOR:BLACK
   1.4 SPRING: STAINLESS STEEL WIRE
2. PRODUCT SPECIFICATION
   2.1 STROKE: 0.7mm MIN
   2.2 CONTACT RESISTANCE: 50MILLIOHMS MIN
   2.3 WHEN THE STROKE IS 0.7mm
       THE NORMAL FORCE SHALL BE 90gf±20gf
   2.4 DURABILITY: 10000 CYCLES,[SPRING FORCE LOSS 20%]

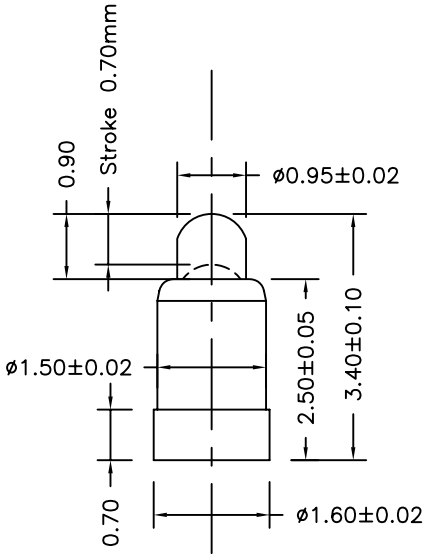

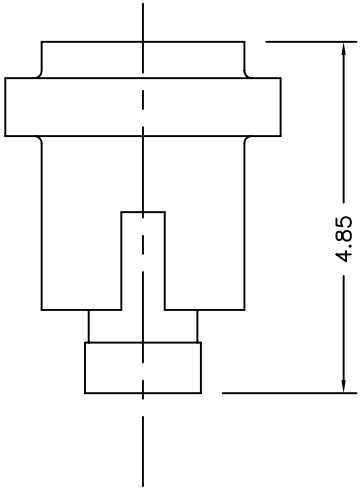

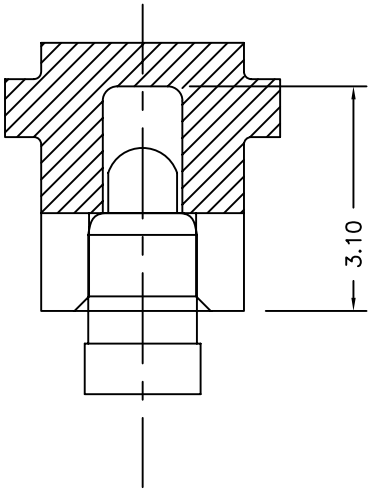

REV.	DESCRIPTION	DATE

UNLESS OTHERWISE SPECIFIED TOLERANCE

ANG.	±5°
0.	±0.3
.0	±0.25
.00	±0.20

SCALE: AS SHOWED | UNIT: mm

DRAWN: Willis 2009/03/04

CHECKED: / /

APPROVED: / /

SIZE: A4 | REV.

All Connectors
www.allconnectors.eu | info@allconnectors.eu
Tel. +49 (0)711 / 358 110 20 | Fax +49 (0)711 / 358 110 25

DRAWN NAME: POGO Pin Single pin H=3.4mm

PRODUCT NO. 303A-250916-000

FILE NAME: 303A-250916-000_B_1

1 2 3 4 5 6 7 8 9 10

G F E D C B A