This document is the property of Nian-Yeong Corporation and is delivered on the express condition that it is not to be disclosed, reproduced or used, in whole or in part, for manufacture or sale by anyone other than Nian-Yeong Corporation without its prior consent, and that no right is granted to disclose or to use any information in this document.

CUSTOMER DRAWING

REV.	DESCRIPTION	APPVL. BY	DATE	ECN NO.
A	RELEASE	Fido Weng	14/09/10"	
B	Change	Fido Weng	15/08/11"	
C				

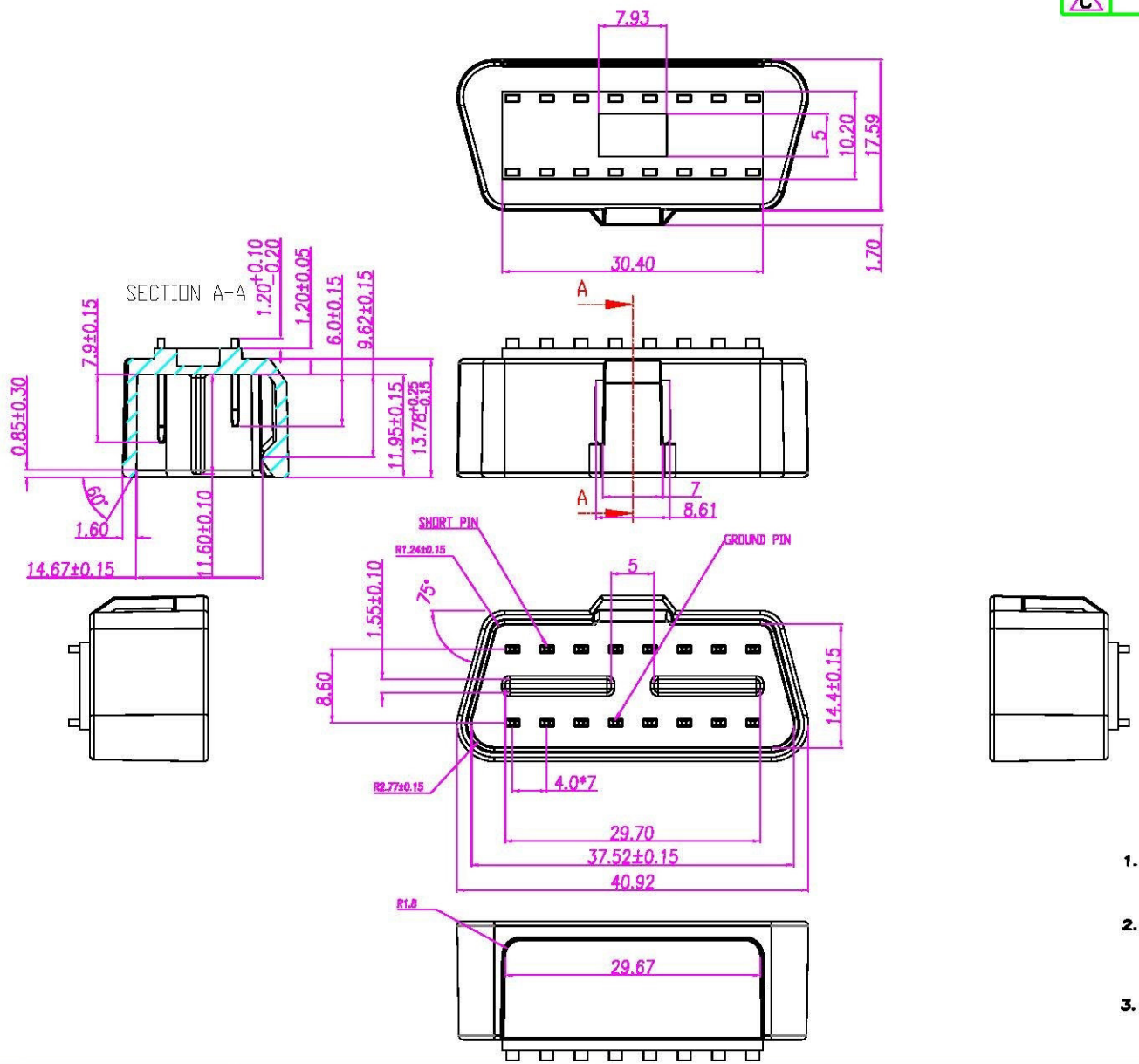

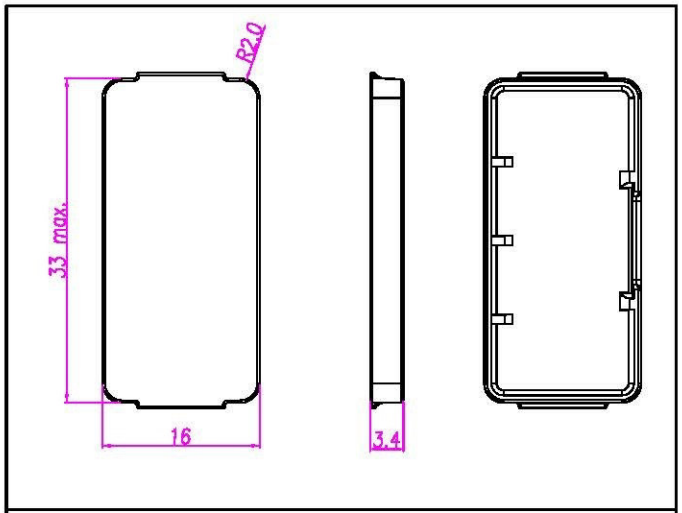

COVER (ON-TE0209)

1. MATERIAL :
   1-1. HOUSING : NYLON66+ GF 15% UL94V-0 ; COLOR/顏色 : BLACK/黑色
   1-2. CONTACT : BRASS
2. FINISH :
   2-1. CONTACT : GOLD PLATED 30u" ON CONTACT AREA, BRIGHT TIN ON SOLDER TAILS, UNDERPLATED NICKEL.
3. Environmental :
   3-1. Operation Temperature : -20℃~85℃

DRAW	KU	APPVL		UNIT	mm	TOLERANCE x ±0.20, xx ±0.10, xxx ±0.05, xxxx ±0.03, ANGULA ±1°	All Connectors www.allconnectors.de Tel.: 0049 711 7009503 70794 Filderstadt - Germany Info@allconnectors.de Fax: 0049 711 7009504 Kettemerstr. 25	TITLE	OBD2 16(M)雙層板直式(附後蓋)		SHEET
CHECK				SCALE	1:1			PART NO.	OBD2-16M1-30	DWG NO. QC4960	VERSION A