This document is the property of Nian-Yeong Corporation and is delivered on the express condition that it is not to be disclosed, reproduced or used, in whole or in part, for manufacture or sale by anyone other than Nian-Yeong Corporation without its prior consent, and that no right is granted to disclose or to use any information in this document.

CUSTOMER DRAWING

REV.	DESCRIPTION	APPROVED BY	DATE	ECN NO.
A	RELEASE	Fido Weng	22/12/08"	
B	ADD P/N	Emily Suen	02/07/12"	ECN12014
C				

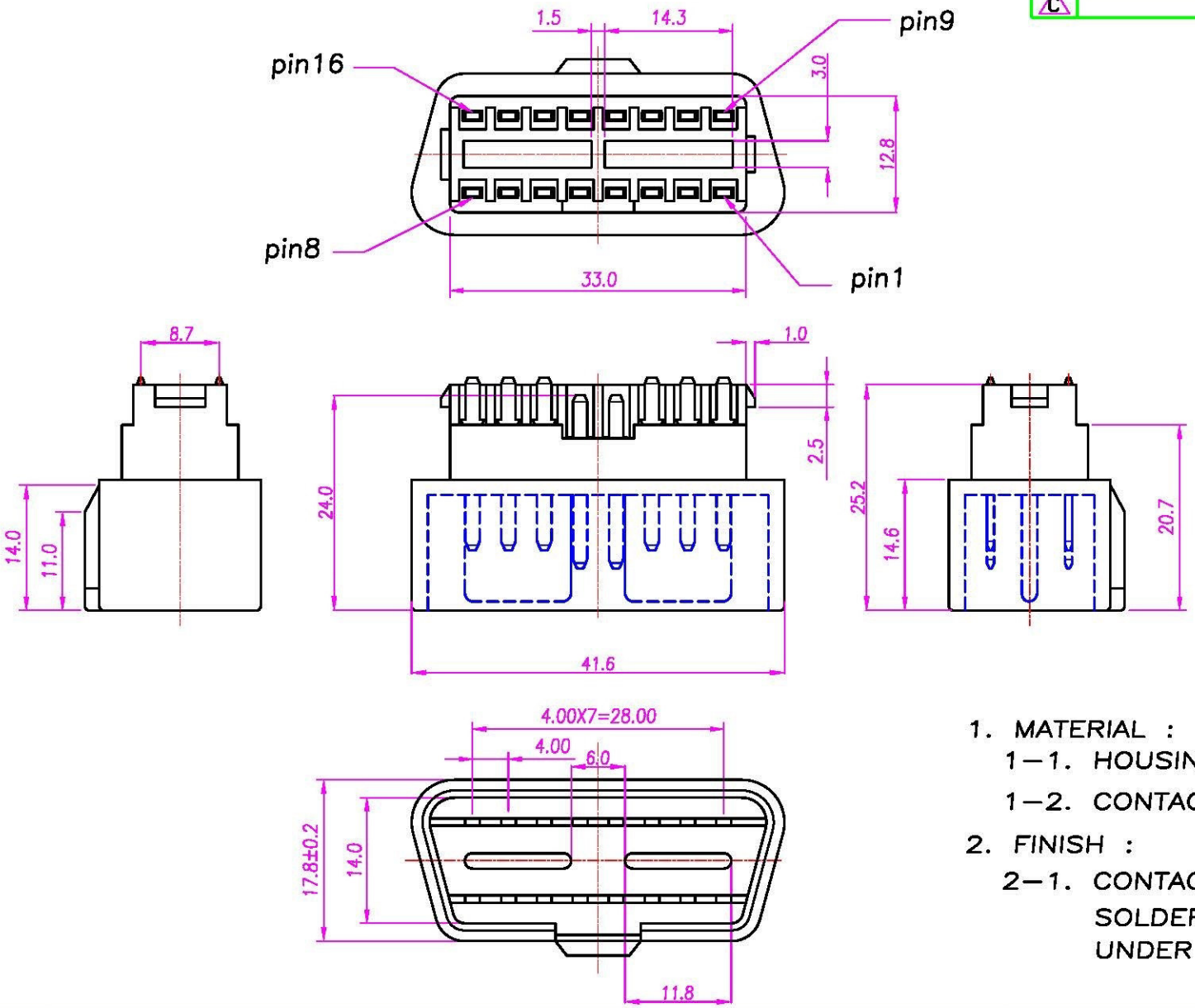

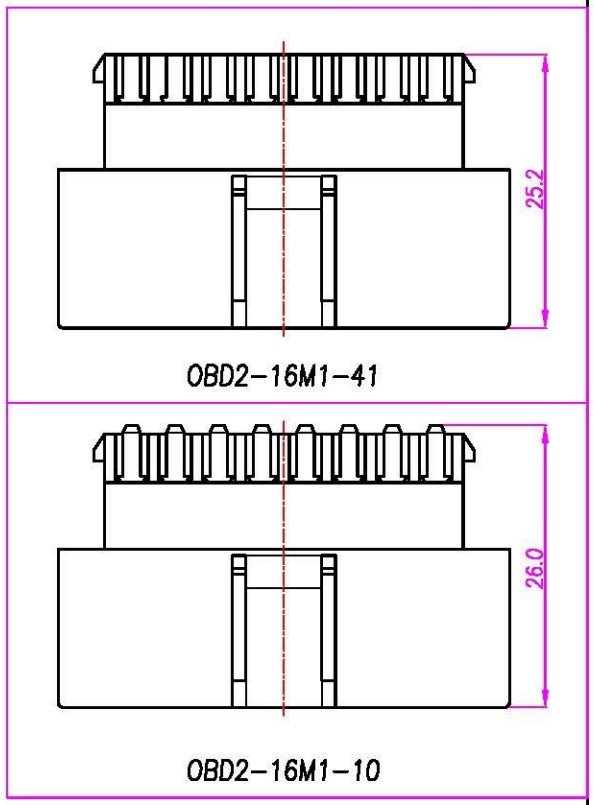

1. MATERIAL :
   1-1. HOUSING : NYLON
   1-2. CONTACT : BRASS
2. FINISH :
   2-1. CONTACT : GOLD FLASH
   SOLDER AREA : TIN
   UNDER PLATE : NICKEL

DRAWN	Ku	APP'D	Emily Suen	UNIT	mm	TOLERANCE .x ±0.20 .xx ±0.10 .xxx ±0.05 .xxxx ±0.03 ANGULA ±1°	All Connectors	TITLE	OBD2 16(M)雙隔板成型式		SHEET
CHK'D	Emily Suen			SCALE	1:1			PART NO.	SEE TABLE A	DWG NO. QC3165	VERSION B