www.allconnectors.de
Tel.: 0049 711 7009503
70794 Filderstadt - Germany

info@allconnectors.de
Fax: 0049 711 7009504
Kettemerstr. 25

WJ-6331B

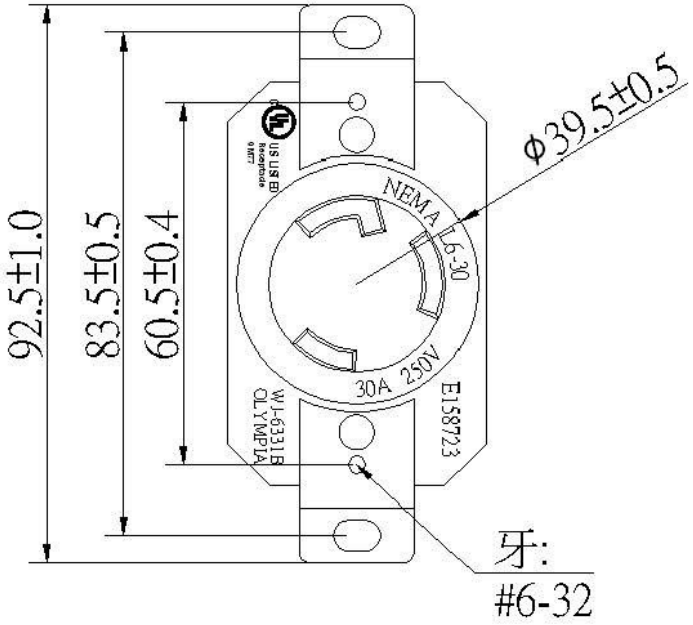

Product Specifications	
Product Item	Single Receptacle Locking Type
Rating	2 Pole, 3 Wire Grounding 30A 250V AC
NEMA Configuration	L6-30R
Color	Black
Contact Material	All contact are brass,0.050”(1.3m/m)thick
Terminal Screw Material	#10 solid brass
Ground Screw Material	#10 solid brass (Green)
Cover (Top) Material	P.B.T. (Poly Butylene Terephthalate Resin) 94V-0
Base Material	P.B.T. (Poly Butylene Terephthalate Resin) 94V-0
Listings	UL/cUL E158723