All Connectors
www.allconnectors.de
Tel.: 0049 711 7009503
70794 Filderstadt - Germany
info@allconnectors.de
Fax: 0049 711 7009504
Kettemerstr. 25

J-526

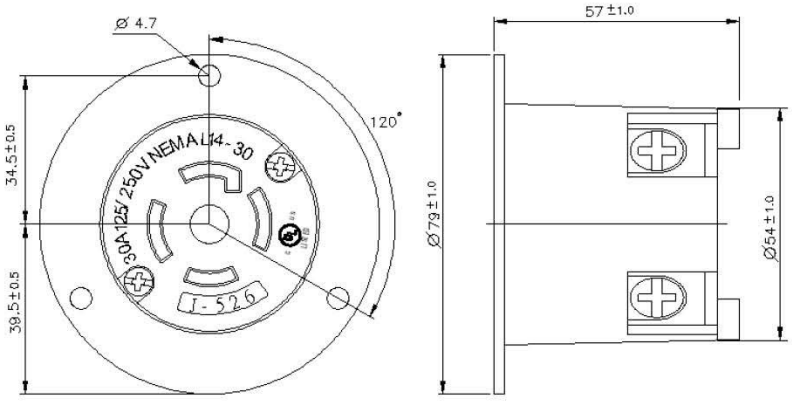

Product Specifications	
Product Item	Flanged Outlet
Wiring Scheme	3 Pole, 4 Wire Grounding
Amperage	30A
Voltage	125/250V AC
NEMA Configuration	L14-30R
Color	Nylon-Natural
Blade Holder Material	Gray Polycarbonate
Terminal Retainer Material	Clear Polycarbonate
Housing Material	Nylon-Natural
Blade Material	Brass
Terminal Screw Material	#10-32 solid brass
Ground Screw Material	#10-32 solid brass (Green)
Listings	