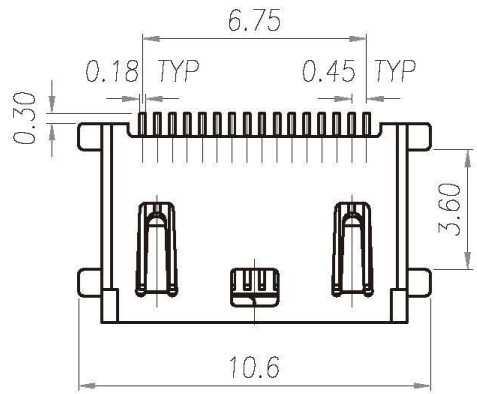

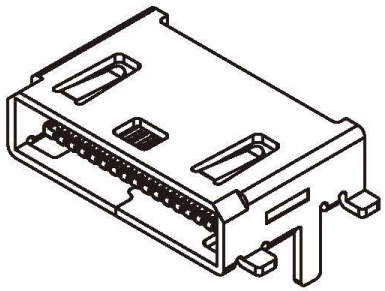

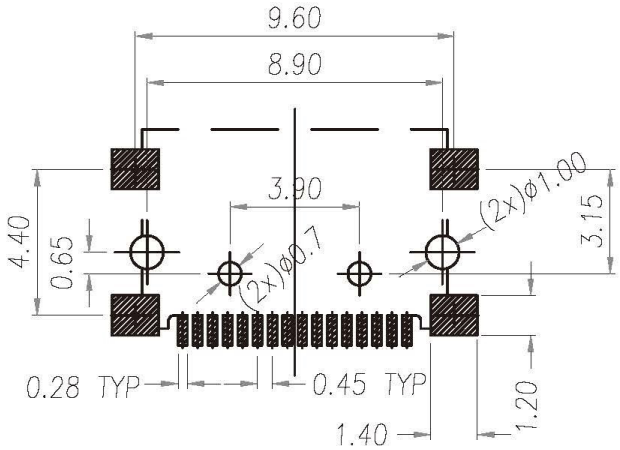

RECOMMEND PCB LAYOUT ±0.05

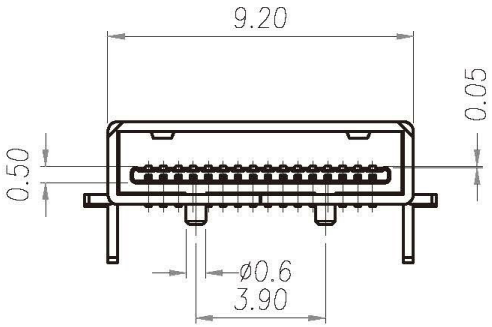

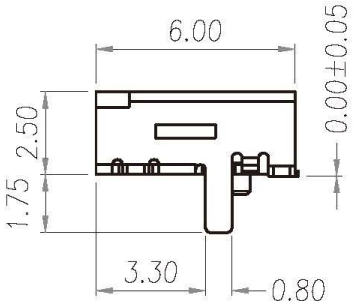

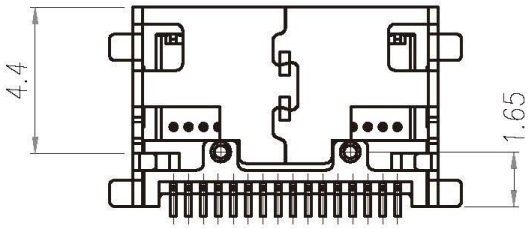

NOTE:

1.ELECRTICAL PROPERTIES:

1-1.RATING:DC 30V/1A.

1-2.CONTACT RESISTANCE:30m Ohm MAX

1-3.INSULATION RESISTANCE:500M Ohm MIN AT DC100V.

1-4.DIELECTRIC WITHSTANDING VOLTAGE:AC 250V/1 MINUTE.

2.MATERIAL:

2-1.PIN:PHOSPHOR BRONZE(C5191R).

2-2.HOUSING: LCP(E480i).

2-3.SHELL:PHOSPHOR BRONZE(C5210R).

3.PLATING:

3-1.PIN: GOLD 10u" MIN ON CONTACT AREA,
SHINE TIN 80u" MIN ON SOLDER TAILS,
UNDERPLATED NICKEL OVER ALL 50u" MIN.

3-2.SHELL: GOLD FLASH/ NICKEL OVER ALL 50u" MIN.

RoHS Compliant

All Connectors
www.allconnectors.de
Tel.: 0049 711 7009503
70794 Filderstadt - Germany
info@allconnectors.de
Fax: 0049 711 7009504
Kettemerstr. 25

DRAWING BY CY		TOLERANCES ARE
CHECKED BY GENIUS		X. ±
UNIT / mm	SCALE 1 : 1	.X ± 0.20
		.XX ± 0.10
DATE		.XXX ± 0.05
		ANG ± 1°
SIZE A4	PPOJECTION	

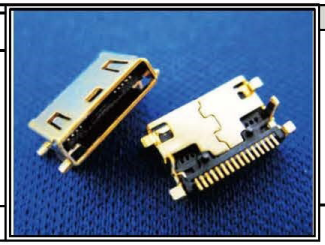

ORDER INFORMATION

MSB-SW-16A-LF

SERIES

FEMALE

90°SMT

16 PIN A TYPE

LEADFREE

DESCRIPTION: MINI USB 16PIN(F) SOCKET