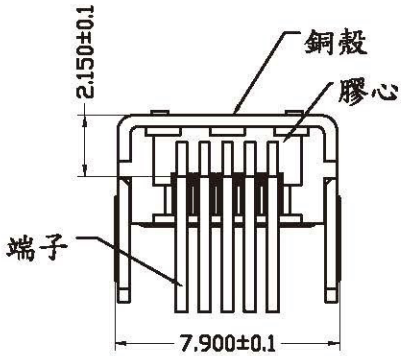

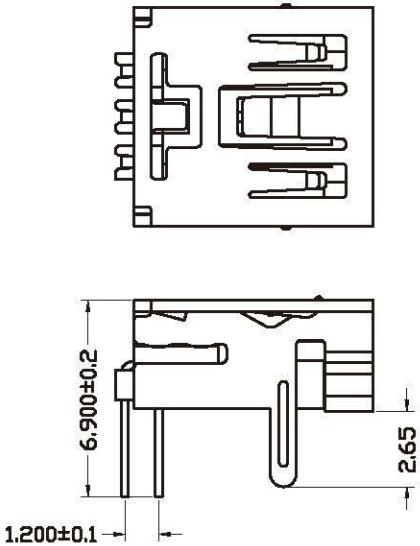

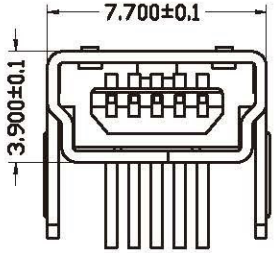

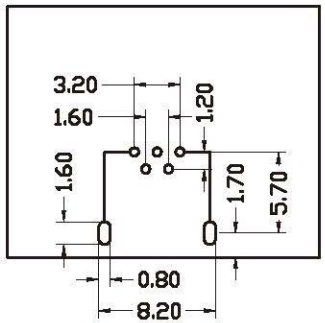

P.C.B. LAYOUT
SCALE 2.00

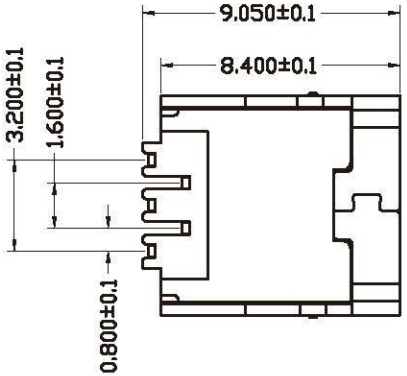

Note:

1.Material:
- 1.1 Insulator: PBT UL 94-V0 rated
- 1.2 Contact: phosphor bronze, t=0.25mm
- 1.3 Shell: brass,t=0.4mm

2.specification:
- 2.1 Current rating:1A MAX
- 2.2 Dielectric withstanding voltage:500 v(ac) far minuta
- 2.3 Contact resistance: 30 mΩ max
- 2.4 Insulation resistance: 1000 mΩ min at DC 500V.
- 2.5 Temperature range: -55°C~+105°C

3.Finishes:
- 3.1 Contacts: Gold flashed 1U",3U",5U",10U",15U",30U"
- 3.2 Shell: Nickel plated.

No.	Part Name	Q'ty	Material	Thickness	Finish
3	MINI USB 5P銅殼	1	Brass	T=0.4±0.02mm	Nickel Plated
2	MINI USB 5PIN 90° 母座 (MIX 2 PIN)	5	PHOSPHOS BRONZE	T=0.25±0.02mm	Gold Plated Over Tin
	MINI USB 5PIN 90° 母座 (MIX 3 PIN)				
1	膠心	1	P.B.T+30%GF		Black/Blue/White

RoHS Compliant

AllConnectors
www.allconnectors.de
Tel.: 0049 711 7005503
70794 Filderstadt - Germany
info@allconnectors.de
Fax: 0049 711 7005504
Kettemerstr. 25

DRAWING BY CY	
CHECKED BY GENIUS	
UNIT / mm	SCALE 1 : 1
DATE	
SIZE A4	PPOJECTION

TOLERANCES ARE
X. ±
.X ±
.XX ±
.XXX ±
ANG ±

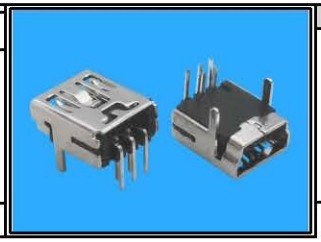

ORDER INFORMATION

MSB-SR45M1-5B-LF
- SERIES
- FEMALE
- DIP 90°
- 4.5mm
- METAL FOOT
- 5 PIN B TYPE
- LEADFREE

DESCRIPTION: