R04S Series Connectors for Space Applications
Space Grade Micro D Connector Right Angle to PCB Style

FB style

FA style

Brief Introduction

- Micro-D connectors for space applications
- Twist pin contacts, high density interconnection, 1.27mm contact spacing and 1.1mm spacing between rows.
- Contacts:9,15,21,31,37, 51,100pins.
- PCB layout:2.54*2.54mm
- FA & FB style.
- Product feature:small and light, antivibration etc. high performance.
- Meet space applications.

Material and finish

Item	Material	Finish
shell	Aluminum alloy	Electroless nickel plating
insulator	20%FPPS	—
seal ring	Silicone rubber	—
contacts	copper alloy	gold plating
locking hardware	stainless steel	passivation
backshell	Aluminum alloy	Electroless nickel plating

Electrical Performance

Performance	Marking	Rating value
Current rating(max)	I	3A(24#),13A(16#)
Dielectric withstanding voltage (sea level)	U	800 Vr.m.x(50Hz)
Contact resistance	R	≤ 10mΩ (24#),≤ 5 mΩ (16#)
Insulation resistance(500VDS, sea leavel)	R	≥ 5000MΩ

Environment performance

Performance	Rating value	Test method
Environment temperature range:	-55 ~ +125 ℃	/
Durability	500 mating cycles	/
Vibration	10Hz ~ 2000Hz, 294m²/s	EIA-364-28, test condition IV
Random vibration	Power spectral density 0.6G²/Hz, root mean square value of total acceleration 28.4G	/
Shock	980m/s², 6ms	EIA-364-27, test condition E
Salt spray	96h	EIA-364-26, test condition B
Humidity	240h	EIA-364-31, test condition IV
Thrmal shock	-55 ~ +125℃	EIA-364-32, test condition IV
Contact engaging and separating force	0.3 ~ 1.5 N (24#) 0.56 ~ 8.35N (16#)	/
Irradiation resistant	Total dose:1X10⁵Gy	/
Thermal vacuum outgassing	TML ≤ 1%, CVCM ≤ 0.1%	/
Magnetic permeability	200 gamma	/

Contact arrangements

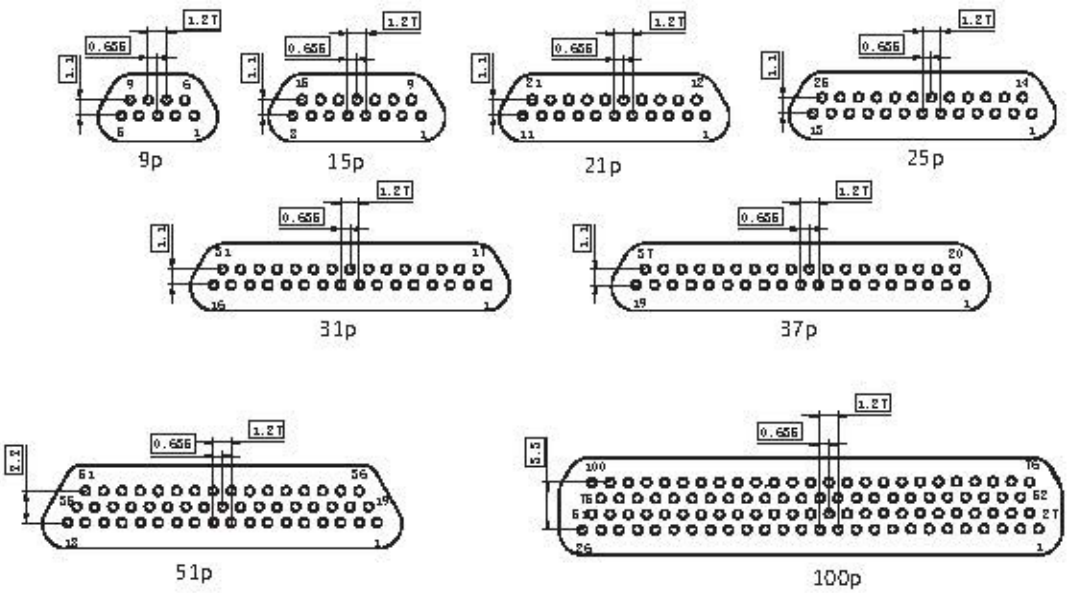

Mating face of male

How to order

Sample part number:	R04S	-31	PI	FB	3	N02

Series:
R04S-Micro D connectors for space applications.

Contact number:
9,15,21,25,31,37,51,100pins

Contact type:
PI-pin in plug RH-socket in receptacle

Right angle to PCB type:
FA style and the PCB layout is 2.54*2.54mm
FB style and the PCB layout is 2.54*2.54mm

Tail length(see page3):
1-2.77mm 2-3.56mm 3-4.37mm

Locking hardware:
blank-without N02-locking hardware, please see page3

The mating locking hardware

Code	Feature	The thichness of mounting panel	Stereogram	Outline dimension
N02	Jackpost with hex head	/		Please see below
N08	1. Jackpost with hex head 2. Fitted to Rear panel mounting only	1.5 $^{+0.1}_{-0.1}$ mm		

Outline dimension

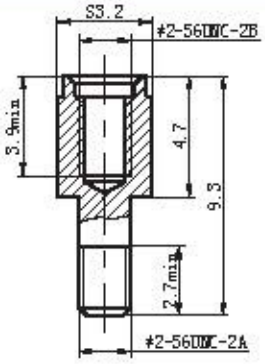

N02 for 9~69pins

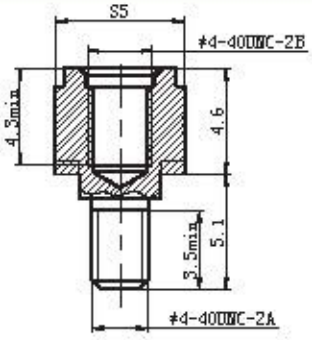

N02 for 100pins

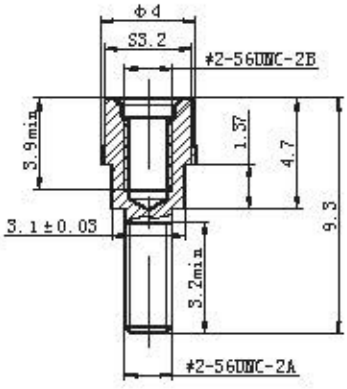

N08 for 9~69pins

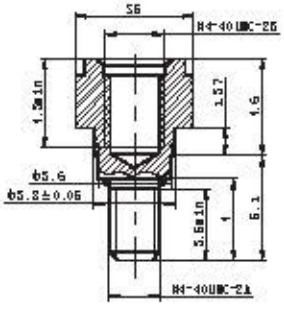

N08 for 100pins

Tail length

tail code	tail length	Recommend the thickness of PCB(in mm)
1	2.77	1.2~2.2
2	3.56	2.0~3.0
3	4.37	2.8~3.8

Note: all dimensions are in mm.

R04S series right angle to PCB connectors for FA style

Product stereogram

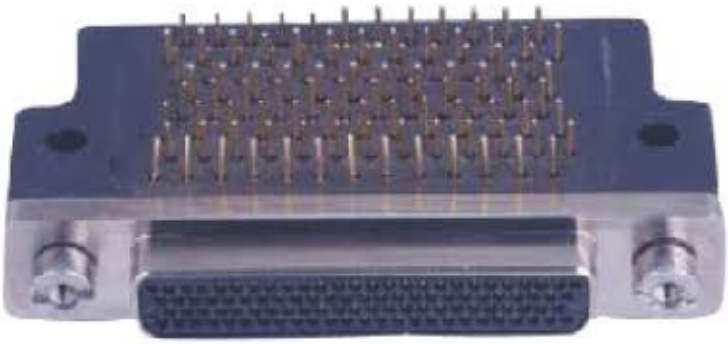

Outline dimension

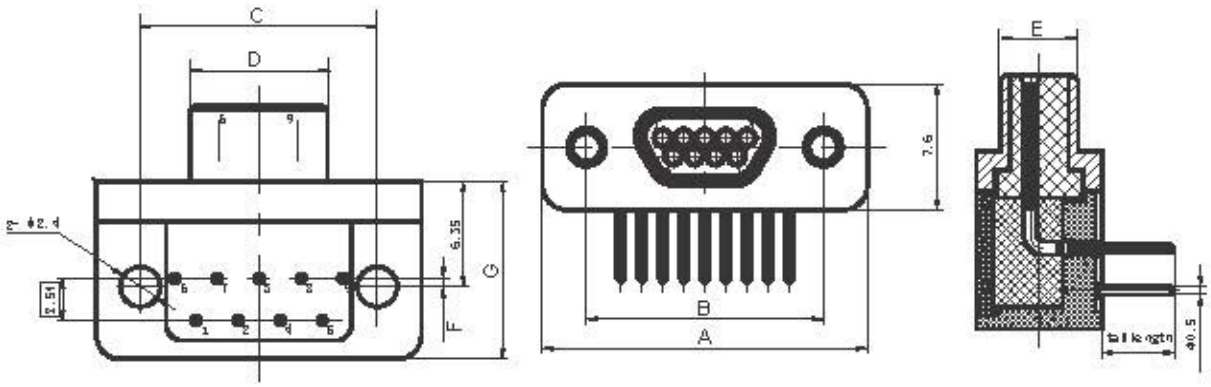

Contact Nos	A	B	C	D		E		F		G	
				PI	RH	PI	RH	PI	RH	PI	RH
9	19.6	14.3	14.3	8.4	10.16	4.7	6.1	0.51	0.51	10.7	10.7
15	23.5	18.2	18.2	12.3	14	4.7	6.1	3.05	3.05	10.7	10.7
21	27.3	22	22	16.1	17.8	4.7	6.1	3.05	3.05	10.7	10.7
25	29.8	24.5	24.5	18.6	20.3	4.7	6.1	3.05	3.05	10.7	10.7
31	33.6	28.3	28.3	22.4	24.12	4.7	6.1	3.05	3.05	13.1	13.1
37	37.4	32.1	32	26.3	27.9	4.7	6.1	3.05	3.05	13.1	13.1

Note: all dimensions are in mm.

Recommend PCB layout for FA style

PCB layout for plug

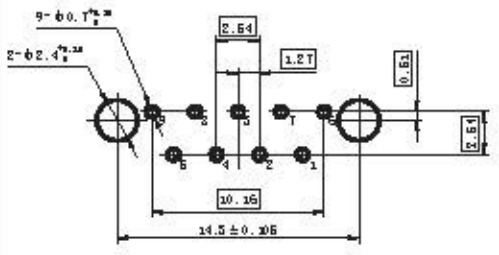

9PI

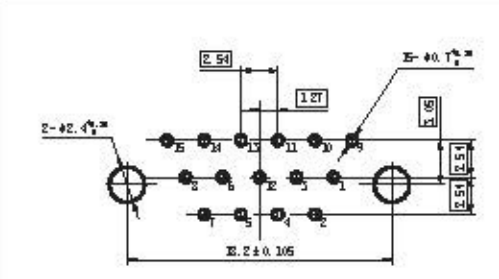

15PI

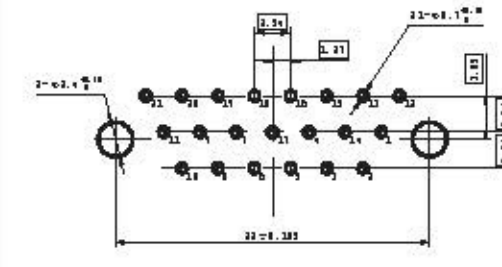

21PI

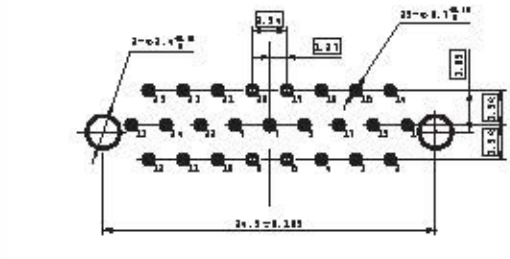

25PI

PCB layout for receptacle

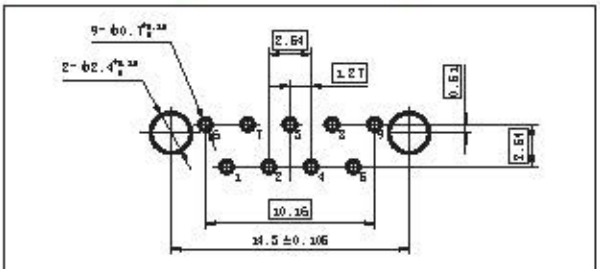

9RH

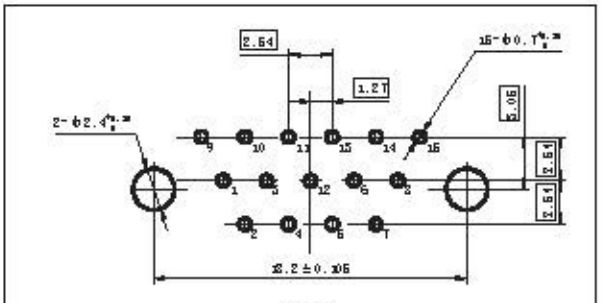

15RH

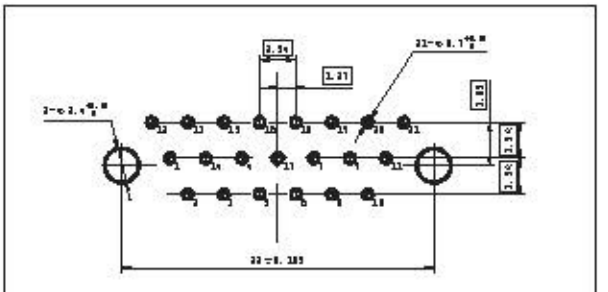

21RH

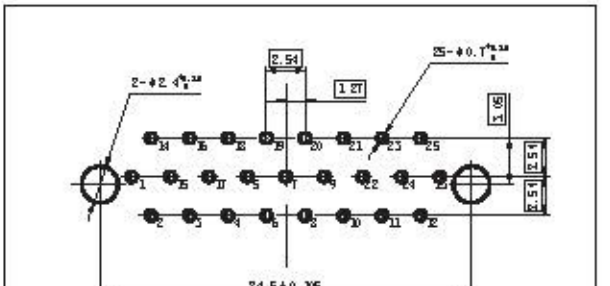

25RH

Notes: 1. all dimensions are in mm. 2.View top side of PCB board.

Recommend PCB layout for FA style

PCB layout for plug

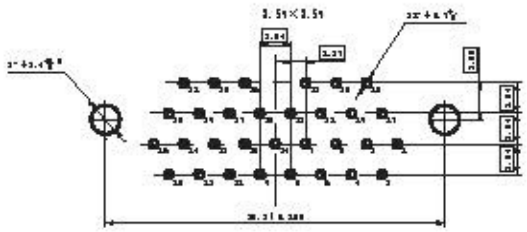

31PI

PCB layout for receptacle

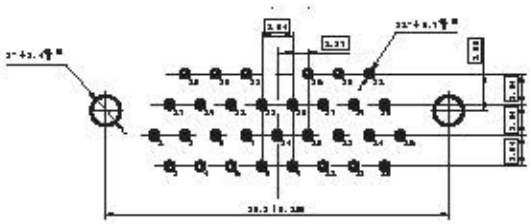

31RH

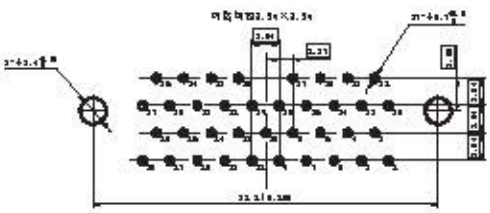

37PI

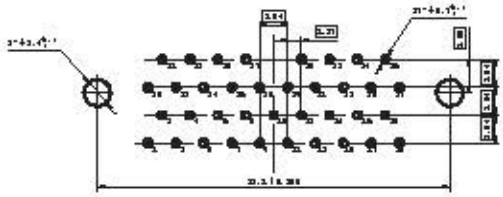

37RH

Notes: 1. all dimensions are in mm. 2.View top side of PCB board.

R04S series right angle to PCB connectors for FB style

Product stereogram

9PI

51PI

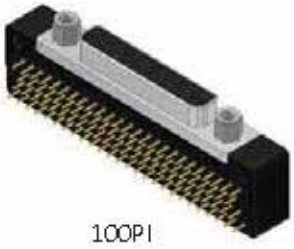
100PI

9RH

51RH

100RH

Outline Dimension

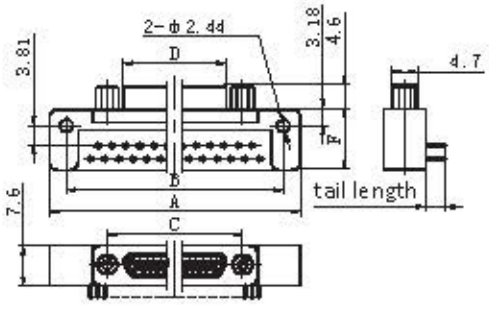

9~37PI

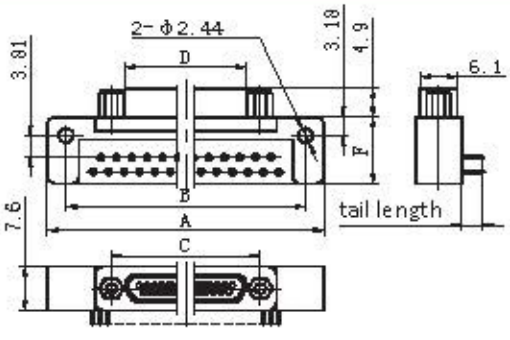

9~37RH

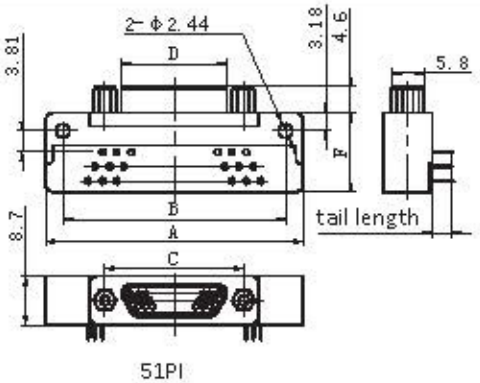

51PI

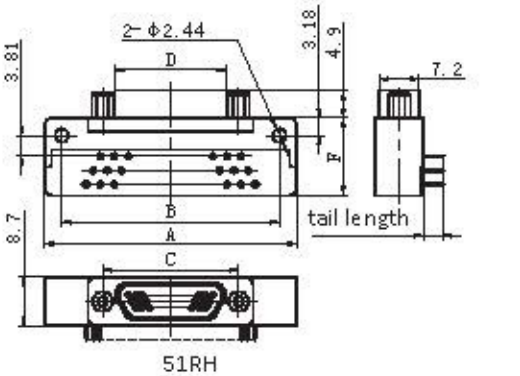

51RH

Notes: 1. all dimensions are in mm.

Outline Dimension

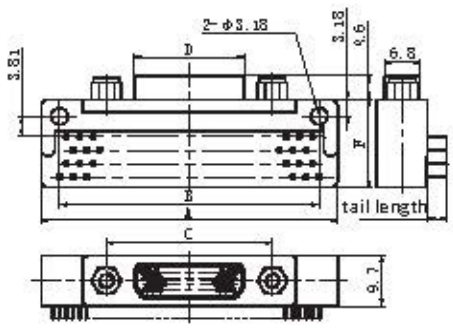

100PI

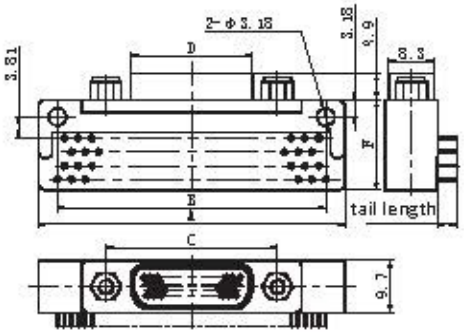

100RH

Contact Nos	Outline dimension(in mm)				
	A	B	C	D	F
9PI	35.2	29.2	14.3	8.4	11.5
15PI	39	33	18.2	12.3	11.5
21PI	42.8	36.8	22	16.1	11.5
25PI	45.4	39.4	24.5	18.6	11.5
31PI	51.7	45.7	28.3	22.4	11.5
37PI	59.3	53.3	32.1	26.2	11.5
51PI	47.6	40.6	30.9	25	14.3
100PI	70.5	63.5	45.7	35.1	16.8
9RH	35.2	29.2	14.3	8.4	11.5
15RH	39	33	18.2	12.3	11.5
21RH	42.8	36.8	22	16.1	11.5
25RH	45.4	39.4	24.5	18.6	11.5
31RH	51.7	45.7	28.3	22.4	11.5
37RH	59.3	53.3	32.1	26.2	11.5
51RH	47.6	40.6	30.9	25	14.3
100RH	70.5	63.5	45.7	35.1	16.8

Recommend the PCB layout for FB style

PCB layout for plug

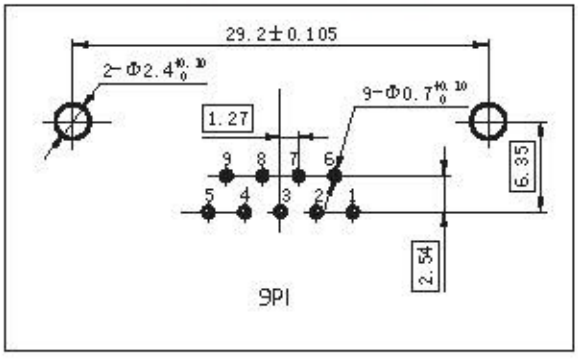

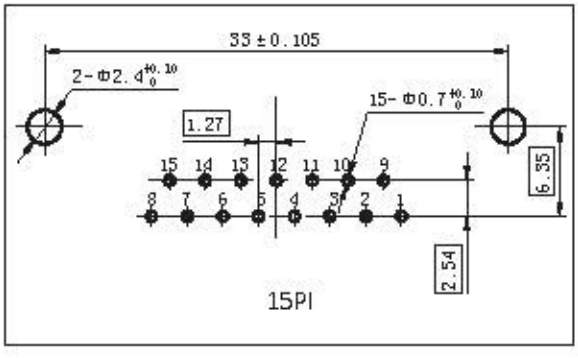

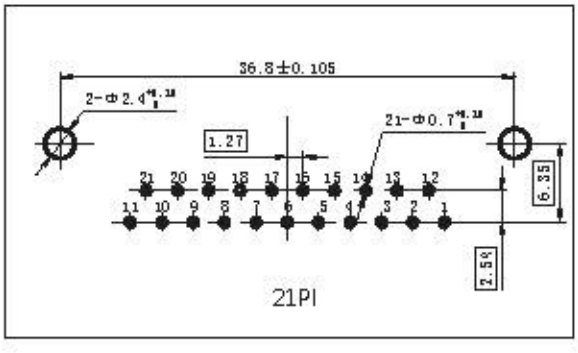

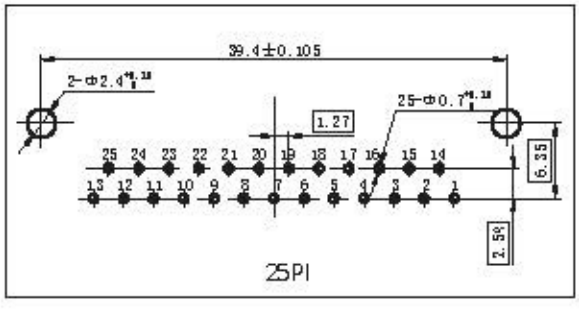

PCB layout for receptacle

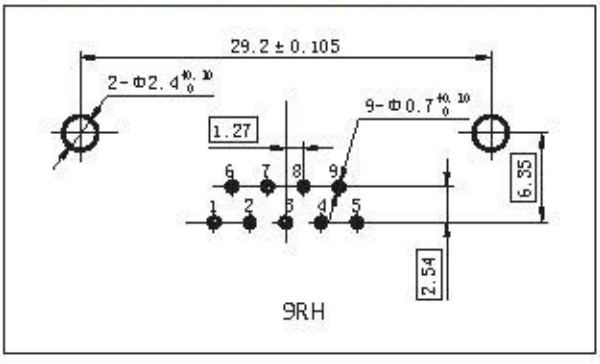

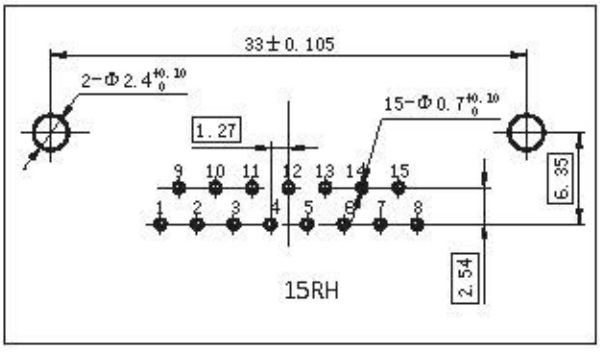

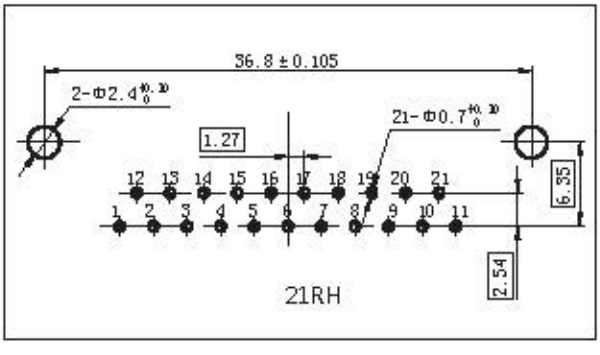

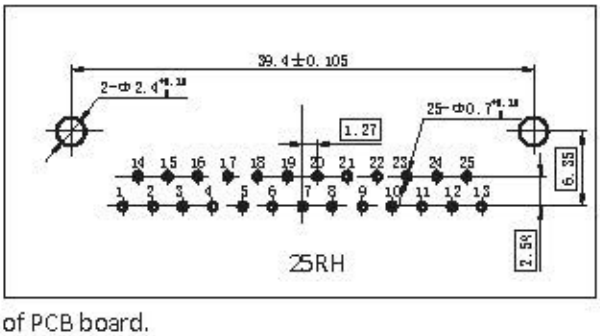

Notes: 1. all dimensions are in mm. 2.View top side of PCB board.

Recommend the PCB layout for FB style

PCB layout for plug

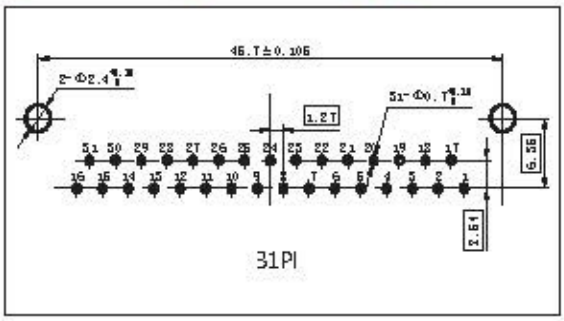

31PI

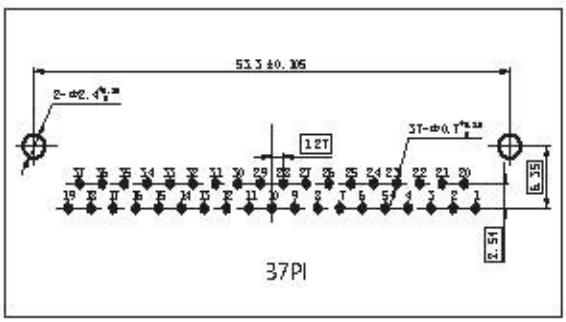

37PI

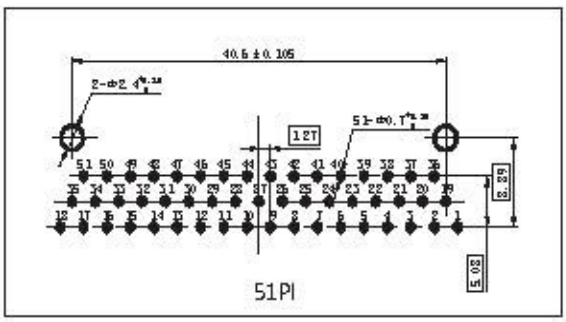

51PI

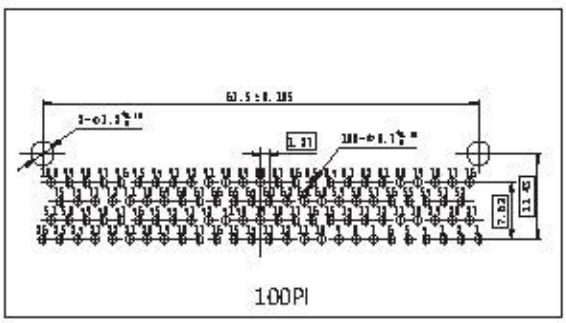

100PI

PCB layout for receptacle

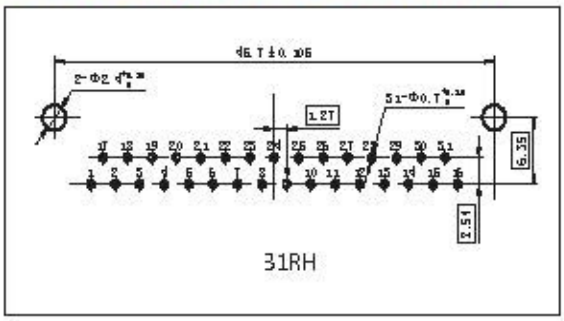

31RH

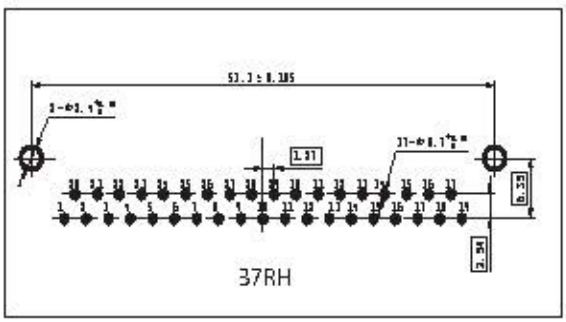

37RH

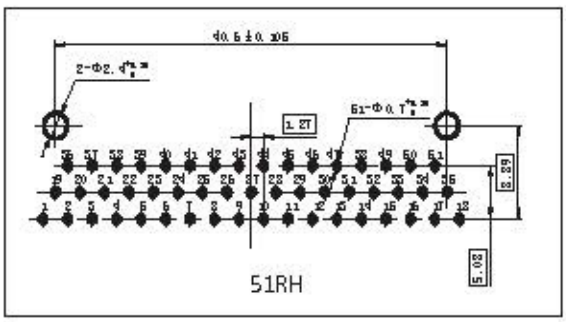

51RH

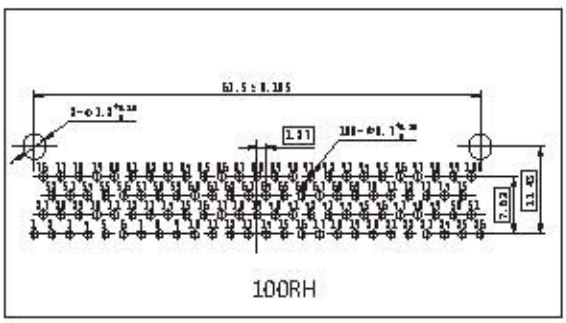

100RH

Notes: 1. all dimensions are in mm. 2.View top side of PCB board.