www.allconnectors.de info@allconnectors.de
Tel.: 0049 711 7009501 Fax: 0049 711 7009504
70794 Filderstadt - Germany Kolbenerstr. 25

R04S Series Connectors for Space Applications
Space Grade Micro D Connector Solder Cup Style

Brief Introduction

- Micro-D connectors for space applications
- Twist pin contacts, high density interconnection, 1.27mm contact spacing and 1.1mm spacing between rows.
- Contacts:9,15,21,31,37, A51,51,69,100pins
- Product feature:small and light, antivibration etc. high performance.
- The solder cup can mate with AWG26 and AWG28 wire.
- Meet space applications.

Material and finish

Item	Material	Finish
shell	Aluminum alloy	Electroless nickel plating
insulator	20%GPPS	—
seal ring	Silicone rubber	—
contacts	copper alloy	gold plating
locking hardware	stainless steel	passivation
backshell	Aluminum alloy	Electroless nickel plating

Electrical Performance

Performance	Marking	Rating value
Current rating(max)	I	3A(24#),13A(16#)
Dielectric withstanding voltage (sea level)	U	800 Vr.m.x(50Hz)
Contact resistance	R	≤10mΩ (24#),≤5mΩ (16#)
Insulation resistance(500VDS, sea leavel)	R	≥5000MΩ

Environment performance

Performance	Rating value	Test method
Environment temperature range:	-55～+125 ℃	/
Durability	500 mating cycles	/
Vibration	10Hz～2000Hz，294m²/s	EIA-364-28, test condition IV
Random vibration	Power spectral density 0.6G²/Hz, root mean square value of total acceleration 28.4G	/
Shock	980m/s²、6ms	EIA-364-27, test condition E
Salt spray	96h	EIA-364-26, test condition B
Humidity	240h	EIA-364-31, test condition IV
Thrmal shock	-55～+125℃	EIA-364-32, test condition IV
Contact engaging and separating force	0.3～1.5 N (24#) 0.56～8.35N (16#)	/
Irradiation resistant	Total dose:1X10⁵Gy	/
Thermal vacuum outgassing	TML ≤1%，CVCM ≤0.1%	/
Magnetic permeability	200 gamma	/

Contact arrangements

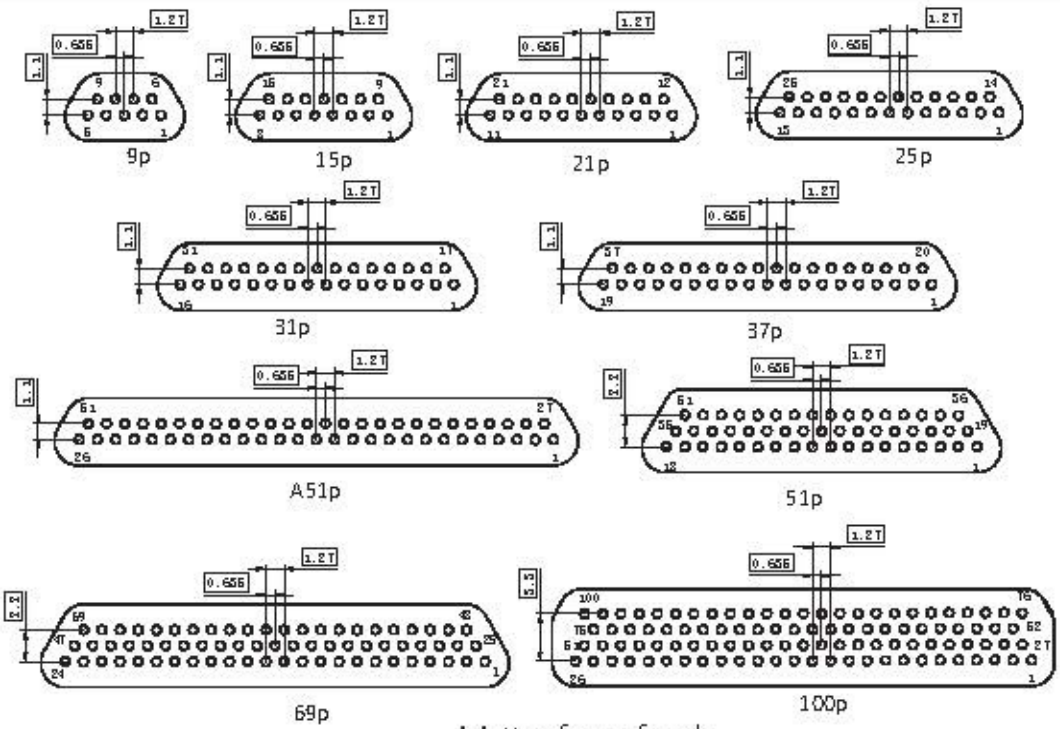

Mating face of male

How to order

Sample part number: R04S -31 PI J B01 AB

Series:
R04S-Micro D connectors for space applications.

Contact number:
9,15,21,25,31,37,A51,51,69,100pins

Contact type:
PI-pin in plug RH-socket in receptacle

Termination style:
J- solder cup connector

Locking hardware:
blank-without B01-locking hardware, please see page5 to page9

Backshell:
blank-without AB-AB style backshell, please see page10 to page12.

R04S series Solder cup connectors

Product stereogram

Plug

Receptacle

Outline Dimension

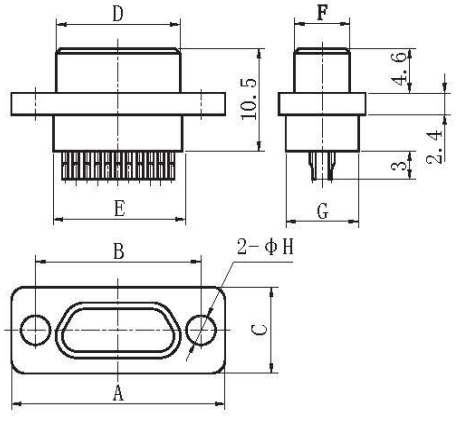

Plug for 9~A51pins

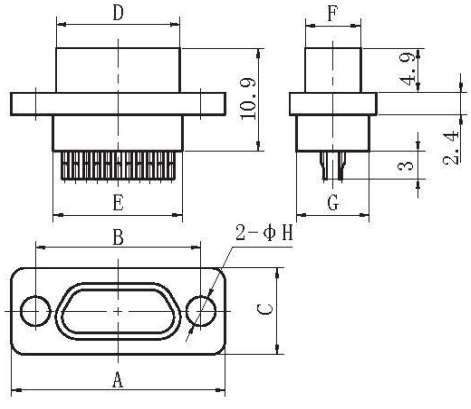

Receptacle for 9~A51pins

Contact Nos	Outline dimension(in mm)							
	A	B	C	D	E	F	G	H
9PI	19.6	14.3	7.6	8.4	9.9	4.7	6.8	2.31
15PI	23.5	18.2	7.6	12.3	13.8	4.7	6.8	2.31
21PI	27.3	22	7.6	16.1	17.6	4.7	6.8	2.31
25PI	29.8	24.5	7.6	18.6	20.2	4.7	6.8	2.31
31PI	33.6	28.3	7.6	22.4	24	4.7	6.8	2.31
37PI	37.4	32.1	7.6	26.2	27.8	4.7	6.8	2.31
A51PI	46.3	41	7.6	35	36.7	4.7	6.8	2.31
9RH	19.6	14.3	7.6	9.9	9.9	6.1	6.8	2.31
15RH	23.5	18.2	7.6	13.7	13.8	6.1	6.8	2.31
21RH	27.3	22	7.6	17.5	17.6	6.1	6.8	2.31
25RH	29.8	24.5	7.6	20.1	20.2	6.1	6.8	2.31
31RH	33.6	28.3	7.6	23.9	24	6.1	6.8	2.31
37RH	37.4	32.1	7.6	27.7	27.8	6.1	6.8	2.31
A51RH	46.3	41	7.6	36.5	36.7	6.1	6.8	2.31

R04S series Solder cup connectors

Outline Dimension

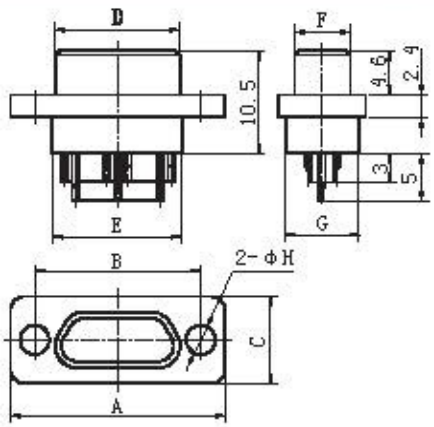

Plug for 51~69pins

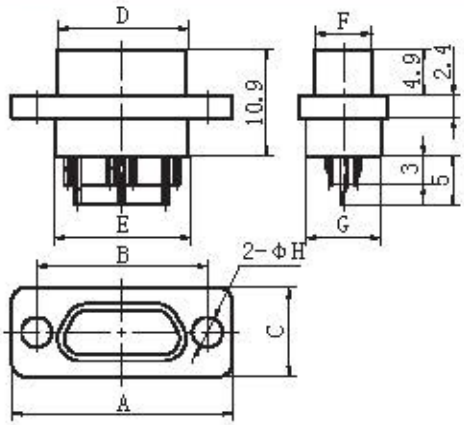

Receptacle for 51~69pins

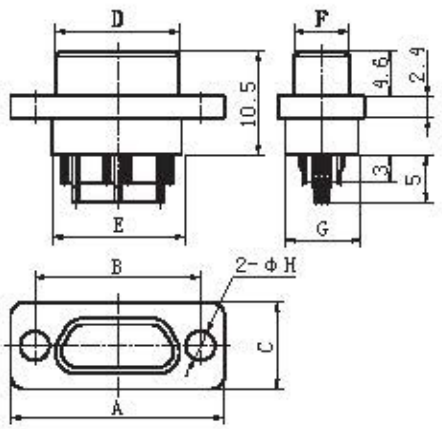

Plug for 100pins

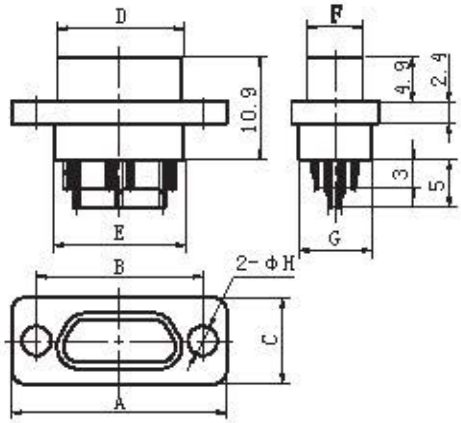

Receptacle for 100pins

Contact Nos	Outline dimension(in mm)							
	A	B	C	D	E	F	G	H
51PI	36.2	30.9	8.7	25	26.6	5.8	7.9	2.31
69PI	43.8	38.5	8.7	32.6	34.2	5.8	7.9	2.31
100PI	54.7	45.7	9.7	35.1	36.6	6.8	9.1	3.7
51RH	36.2	30.9	8.7	26.5	26.6	7.2	7.9	2.31
69RH	43.8	38.5	8.7	34.1	34.2	7.2	7.9	2.31
100RH	54.7	45.7	9.7	36.6	36.6	8.3	9.1	3.7

The mating locking hardware

Code	Feature	Outline dimension	
		for 9~69pins	for 100pins
B01	1. Removable hardware. 2. Short jackscrew with a retainer ring. 3. Hex socket head	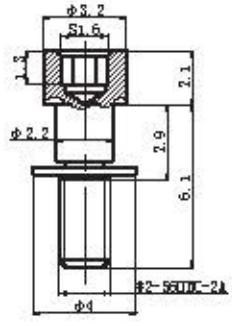	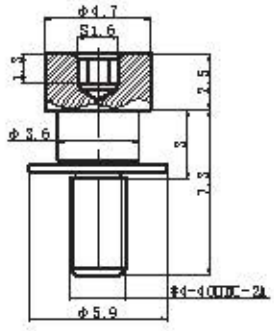
B02	1. Removable hardware. 2. Short jackscrew with a retainer ring. 3. Slot head	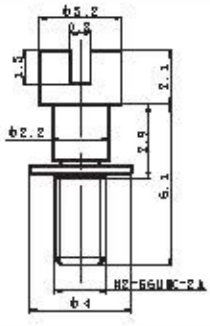	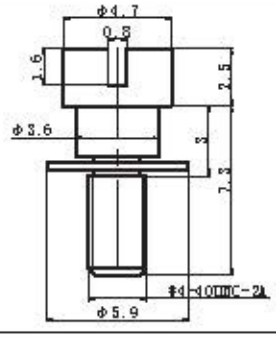
B03	1. Removable hardware. 2. Long jackscrew with a retainer ring. 3. Hex socket head	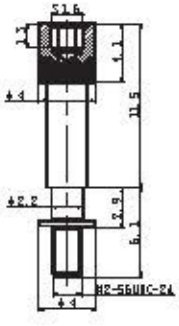	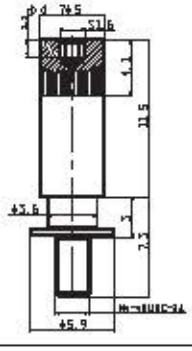
B04	1. Removable hardware. 2. Long jackscrew with a retainer ring. 3. Slot head	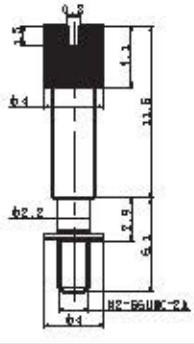	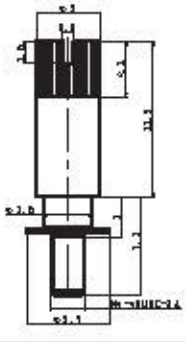

Note: all dimensions are in mm.

The mating locking hardware

Code	Feature	Outline dimension	
		for 9~69pins	for 100pins
B05	1. Removable hardware. 2. Short jackscrew with a retainer ring. 3. Hex socket head 4. Used for connetors with AA, AB, AC, AD AG type backshell	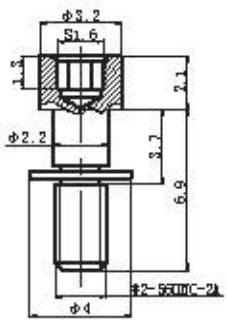	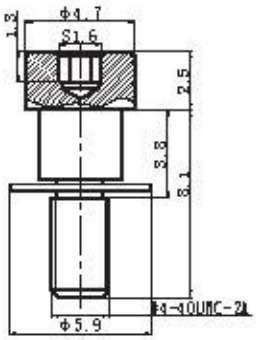
B06	1. Removable hardware. 2. Short jackscrew with a retainer ring. 3. Slot head 4. Used for connetors with AA, AB, AC, AD AG type backshell	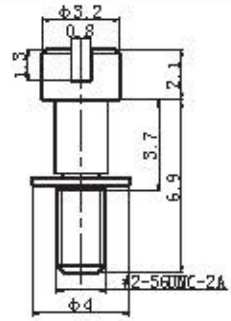	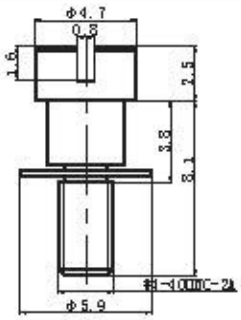
B07	1. Removable hardware. 2. Long jackscrew with a retainer ring. 3. Hex socket head 4. Used for connetors with AA, AB, AC, AD AG type backshell	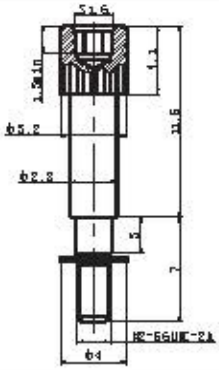	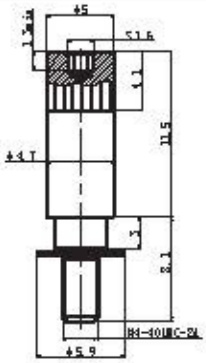
B08	1. Removable hardware. 2. Long jackscrew with a retainer ring. 3. Slot head 4. Used for connetors with AA, AB, AC, AD AG type backshell	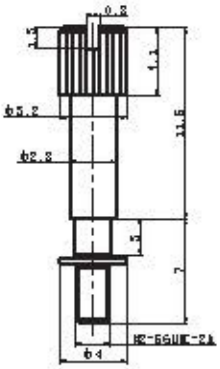	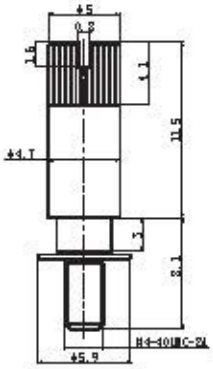

Note: all dimensions are in mm.

The mating locking hardware

Code	Feature	Outline dimension	
		for 9~69pins	for 100pins
B10	1. Removable hardware. 2. Short jackscrew with a retainer ring. 3. Hex socket head 4. Used for connetors with AH, AJ type backshell.	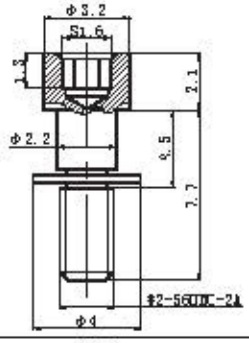	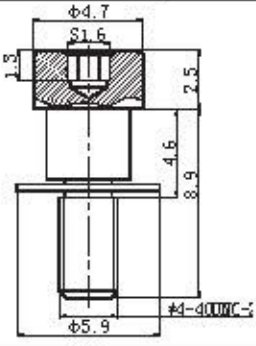
B11	1. Removable hardware. 2. Short jackscrew with a retainer ring. 3. Slot head 4. Used for connetors with AH, AJ type backshell.	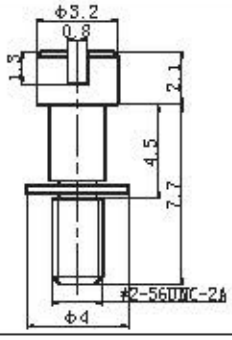	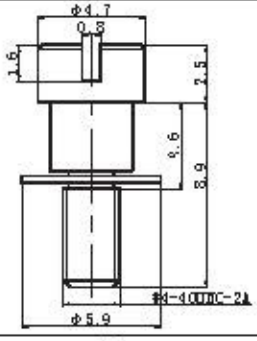
B12	1. Removable hardware. 2. Long jackscrew with a retainer ring. 3. Hex socket head 4. Used for connetors with AH, AJ type backshell.	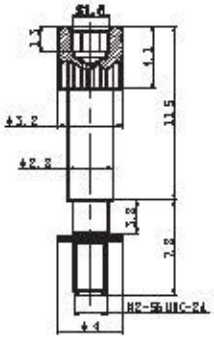	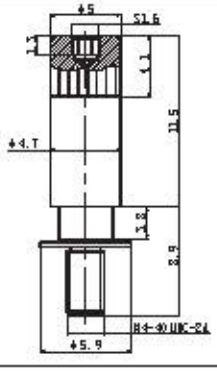
B13	1. Removable hardware. 2. Long jackscrew with a retainer ring. 3. Slot head 4. Used for connetors with AH, AJ type backshell.	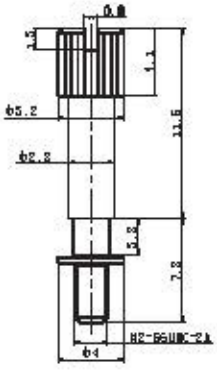	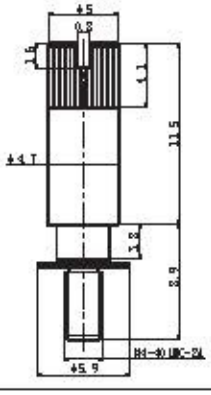

Note: all dimensions are in mm.

The mating locking hardware

Code	Feature	Outline dimension	
		for 9~69pins	for 100pins
S01	1. Non removable hardware. 2. Short jackscrew with a retainer sleeve. 3. Hex socket head	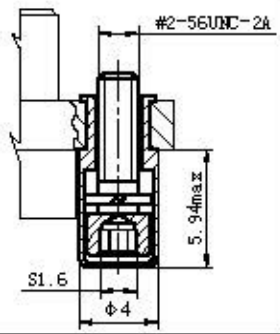	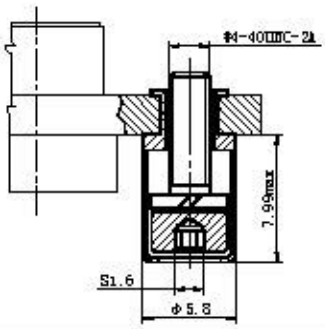
S02	1. Non removable hardware. 2. Short jackscrew with a retainer sleeve. 3. Slot socket head	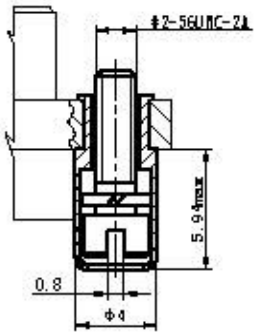	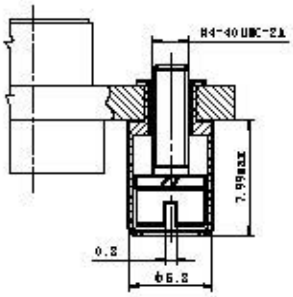
S03	1. Non removable hardware. 2. Long jackscrew with a retainer sleeve. 3. Hex socket head	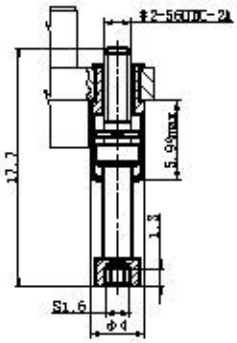	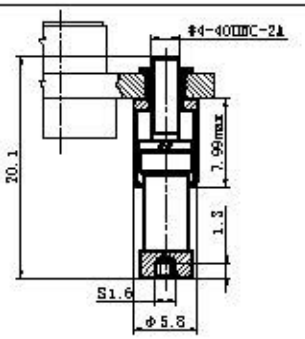
S04	1. Non removable hardware. 2. Long jackscrew with a retainer sleeve. 3. Slot socket head	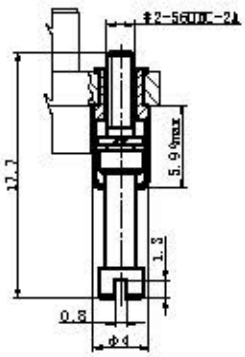	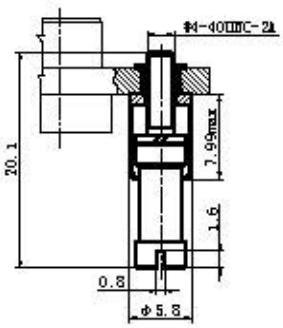

Note: all dimensions are in mm.

The mating locking hardware

Code	Feature	Outline dimension	
		for 9~69pins	for 100pins
N01	1. Hex head jackpost. 2. Used for front panel mounting. 3. The thickness of panel is not more than 2mm.	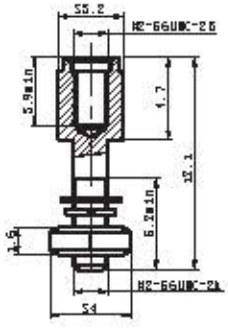	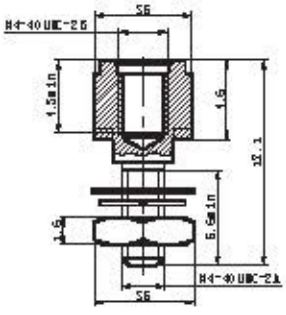
N06	1. Hex head jackpost. 2. Used for connectors with backshell.	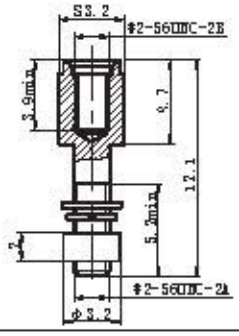	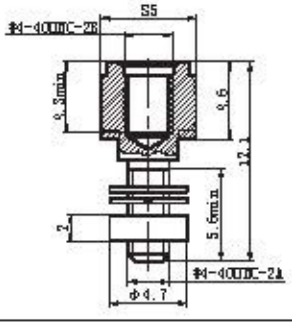
N07	1. Hex head jackpost. 2. Used for front panel mounting. 3. The thickness of panel is not more than 5mm.	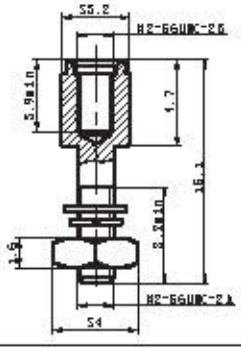	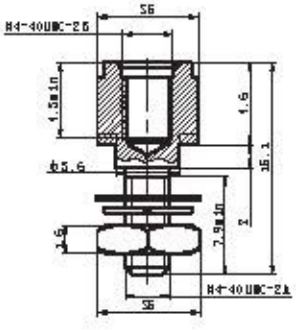

Note: all dimensions are in mm.

Backshell

Stereogram & feature		Outline dimension
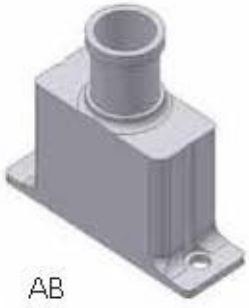 AB AB style: one-piece, standard type	AC AC style: one-piece, wide entry.	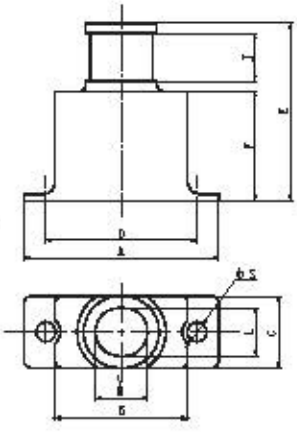
AD AD style: two-piece, elongated type	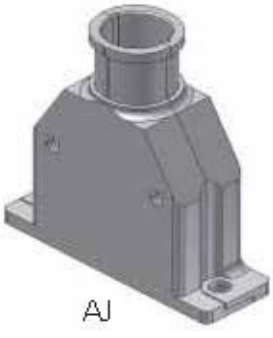 AJ AJ style: two-piece, non-skid and elongatad type	
AG AD style: one-piece, standard type with 90 °entry	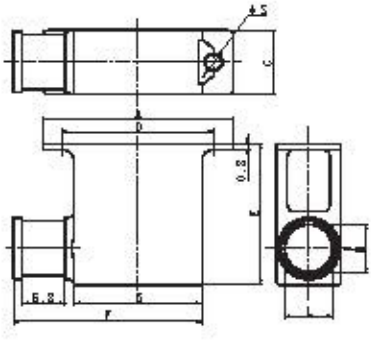	

Notes: all dimensions are in mm.

Outline dimension of backshell

Part No.	Outline dimension(in mm)									
	A	B	C	D	E	F	J	ΦS	L	M
R04S-9-AB	19.6	11.2	8.7	14.3	21.4	13.2	5.8	2.31	-	4.7
R04S-15-AB	23.5	15	8.7	18.2	21.4	13.2	5.8	2.31	-	5.8
R04S-21-AB	27.3	18.8	8.7	22	21.4	13.2	5.8	2.31	-	6.5
R04S-25-AB	29.8	21.4	8.7	24.5	21.4	13.2	5.8	2.31	6.7	7.8
R04S-31-AB	33.6	25.2	8.7	28.3	21.4	13.2	5.8	2.31	6.7	8.3
R04S-37-AB	37.4	29	8.7	32.1	21.4	13.2	5.8	2.31	6.7	9.5
R04S-A51-AB	46.3	37.9	8.7	41	21.4	13.2	5.8	2.31	6.7	13
R04S-51-AB	36.2	27.8	9.7	30.9	23.7	15.5	5.8	2.31	7.5	11.9
R04S-69-AB	43.8	35.4	9.7	38.5	23.7	15.5	5.8	2.31	7.5	15.7
R04S-100-AB	54.7	38.7	11	45.7	24.2	16	5.8	3.7	8.7	17.4
R04S-9-AC	19.6	11.2	8.7	14.3	21.4	13.2	5.8	2.31	6.7	7.9
R04S-15-AC	23.5	15	8.7	18.2	21.4	13.2	5.8	2.31	6.7	11.6
R04S-21-AC	27.3	18.8	8.7	22	21.4	13.2	5.8	2.31	6.7	15.4
R04S-25-AC	29.8	21.4	8.7	24.5	21.4	13.2	5.8	2.31	6.7	18
R04S-31-AC	33.6	25.2	8.7	28.3	21.4	13.2	5.8	2.31	6.7	21.8
R04S-37-AC	37.4	29	8.7	32.1	21.4	13.2	5.8	2.31	6.7	25.6
R04S-A51-AC	46.3	37.9	8.7	41	21.4	13.2	5.8	2.31	6.7	26.2
R04S-51-AC	36.2	27.8	9.7	30.9	23.7	15.5	5.8	2.31	7.5	23.4
R04S-69-AC	43.8	35.4	9.7	38.5	23.7	15.5	5.8	2.31	7.5	29.4
R04S-100-AC	54.7	38.7	11	45.7	24.2	16	5.8	3.7	8.7	34.1
R04S-9-AD	19.6	12.1	8.7	14.3	29.4	21.2	5.8	2.31	-	4.7
R04S-15-AD	23.5	16	8.7	18.2	29.4	21.2	5.8	2.31	-	5.8
R04S-21-AD	27.3	19.8	8.7	22	29.4	21.2	5.8	2.31	-	6.5
R04S-25-AD	29.8	22.3	8.7	24.5	29.4	21.2	5.8	2.31	6.6	7.9
R04S-31-AD	33.6	26.1	8.7	28.3	29.4	21.2	5.8	2.31	6.6	8.4
R04S-37-AD	37.4	29.9	8.7	32.1	29.4	21.2	5.8	2.31	6.6	9.5
R04S-A51-AD	46.3	38.8	8.7	41	29.4	21.2	5.8	2.31	6.6	13.1
R04S-51-AD	36.2	28.7	9.7	30.9	31.7	23.5	5.8	2.31	7.5	11.9
R04S-69-AD	43.8	36.3	9.7	38.5	31.7	23.5	5.8	2.31	7.5	15.7
R04S-100-AD	54.7	38.8	11	45.7	32.2	24	5.8	3.7	8.7	17.5
R04S-9-AJ	19.6	12.1	8.7	14.3	29.4	21.2	5.8	2.31	-	4.7
R04S-15-AJ	23.5	16	8.7	18.2	29.4	21.2	5.8	2.31	-	5.8
R04S-21-AJ	27.3	19.8	8.7	22	29.4	21.2	5.8	2.31	-	6.5
R04S-25-AJ	29.8	22.3	8.7	24.5	29.4	21.2	5.8	2.31	6.6	7.9
R04S-31-AJ	33.6	26.1	8.7	28.3	29.4	21.2	5.8	2.31	6.6	8.4
R04S-37-AJ	37.4	29.9	8.7	32.1	29.4	21.2	5.8	2.31	6.6	9.5
R04S-A51-AJ	46.3	38.8	8.7	41	29.4	21.2	5.8	2.31	6.6	13.1
R04S-51-AJ	36.2	28.7	9.7	30.9	31.7	23.5	5.8	2.31	7.5	11.9
R04S-69-AJ	43.8	36.3	9.7	38.5	31.7	23.5	5.8	2.31	7.5	15.7
R04S-100-AJ	54.7	38.8	11	45.7	32.2	24	5.8	3.7	8.7	17.5
R04S-9-AG	19.6	11.2	8.7	14.3	17.3	19.4	-	2.31	-	4.7
R04S-15-AG	23.5	15	8.7	18.2	18.4	23.2	-	2.31	-	5.8
R04S-21-AG	27.3	18.8	8.7	22	19.1	27	-	2.31	-	6.5
R04S-25-AG	29.8	21.4	8.7	24.5	20.4	29.6	-	2.31	6.7	7.8

Outline dimension of backshell

Part No.	Outline dimension(in mm)									
	A	B	C	D	E	F	J	ΦS	L	M
R04S-31-AG	33.6	25.2	8.7	28.3	20.9	33.4	-	2.31	6.7	8.3
R04S-37-AG	37.4	29	8.7	32.1	22.1	37.2	-	2.31	6.7	9.5
R04S-A51-AG	46.3	37.9	8.7	41	25.6	46.1	-	2.31	6.7	13
R04S-51-AG	36.2	27.8	9.7	30.9	24.5	36	-	2.31	7.5	11.9
R04S-69-AG	43.8	35.4	9.7	38.5	28.3	43.6	-	2.31	7.5	15.7
R04S-100-AG	54.7	38.7	11	45.7	30	46.9	-	3.7	8.7	17.4