This document is the property of Nian-Yeong Corporation and is delivered on the express condition that it is not to be disclosed, reproduced or used, in whole or in part, for manufacture or sale by anyone other than Nian-Yeong Corporation without its prior consent, and that no right is granted to disclose or to use any information in this document.

CUSTOMER DRAWING

REV.	DESCRIPTION	APPROVED BY	DATE	ECN NO.
A	RELEASE	Fido Weng	28/12/10'	
B	ADD P/N	Emily Suen	27/06/12'	
C				

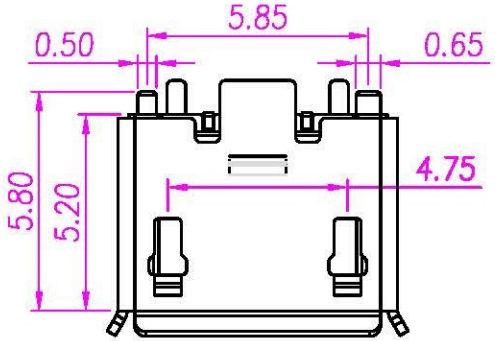

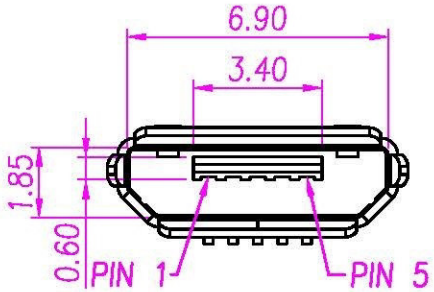

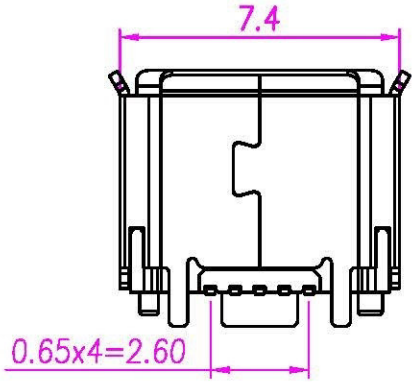

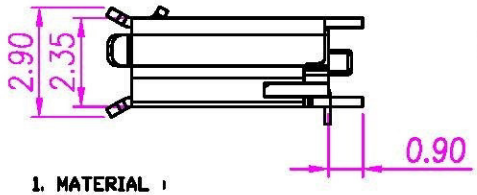

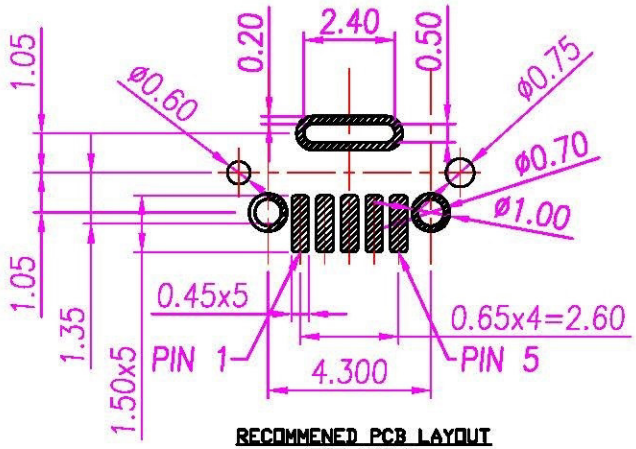

RECOMMENED PCB LAYOUT
(TOP VIEW)

MU-05F4-68/MU-05F4-74

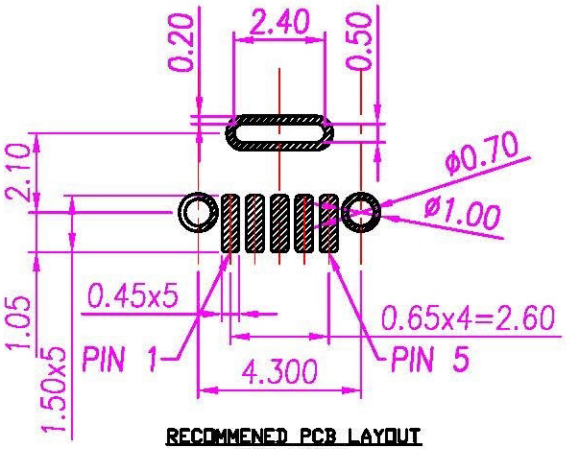

RECOMMENED PCB LAYOUT
(TOP VIEW)

MU-05F4-73

1. MATERIAL :
   1-1. HOUSING : LCP UL94V-0 ; COLOR : BLACK
   1-2. CONTACT : PHOSPHOR BRONZE
   1-3. SHELL : STAINLESS STEEL
   1-4. CAP : LCP UL94V-0 ; COLOR : BLACK
2. FINISH :
   2-1. CONTACT : CONTACT AERA : SEE TABLE A
   GOLD FLASH ON OTHER AERA
   UNDERPLATED : SEE TABLE A
   2-2. SHELL : MATTE TIN PLATED
3. Environmental :
   3-1. Operation Temperature : -40°C~105°C

TABLE A B

MU-05F4-74	有定位柱	GOLD 50u' MIN	NICKEL 200u' MIN.
MU-05F4-73	無定位柱	GOLD 10u' MIN	NICKEL 50u' MIN.
MU-05F4-68	有定位柱	GOLD 10u' MIN	NICKEL 50u' MIN.
P/N	定位柱	CONTACT AERA	UNDERPLATED

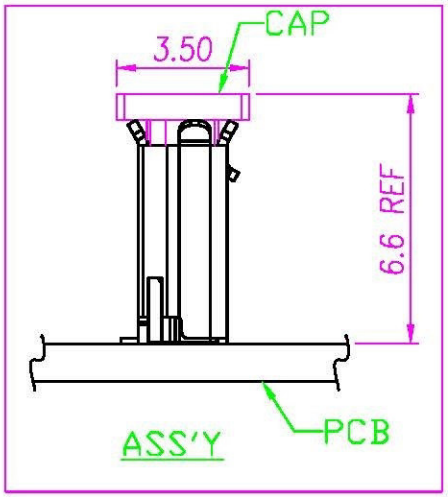

DRAWN	Yeh Chou	APPEND	Emily Suen	UNIT	mm	TOLERANCE x ±0.20 xx ±0.10 xxx ±0.05 xxxx ±0.03 ANGULA ±1°	All Connectors	TITLE	MICRO USB 5PIN(F) DIP		SHEET
CHKED	Emily Suen			SCALE	1:1		www.allconnectors.de Tel.: 0049 711 7009503 70794 Filderstadt Germany	PART NO.	SEE TABLE A	DWG NO. QC5502	VERSION B

info@allconnectors.de
Fax: 0049 711 7009504
Kalkäcker 25