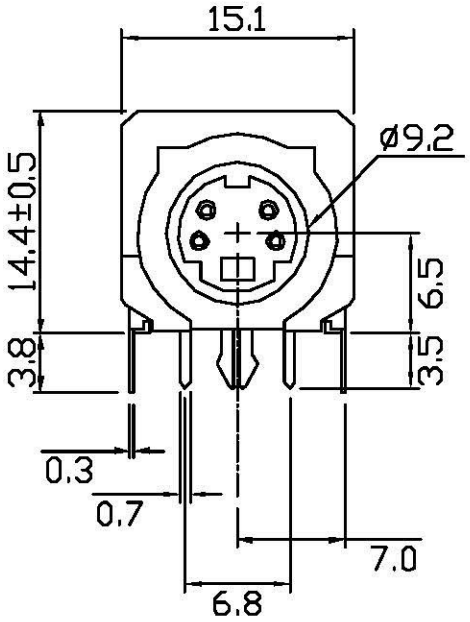

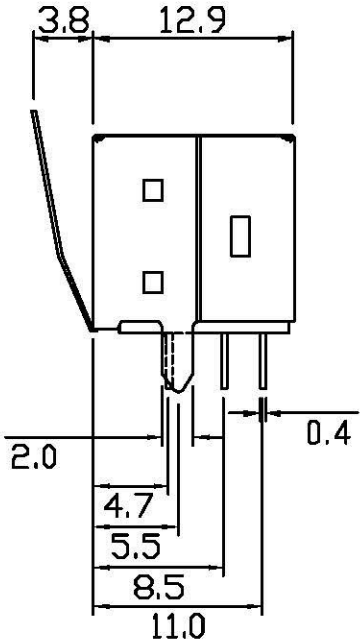

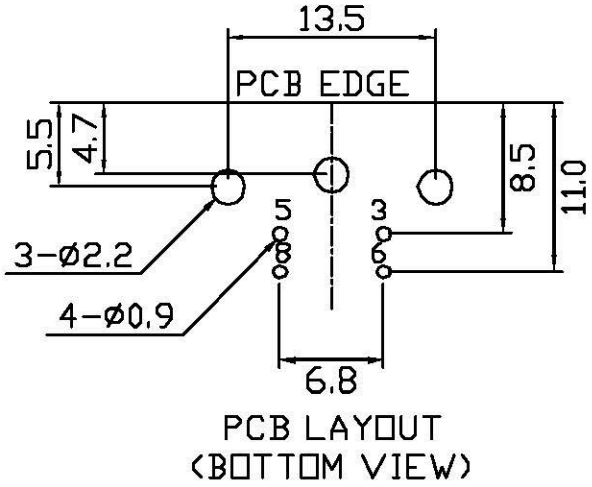

PCB LAYOUT
(BOTTOM VIEW)

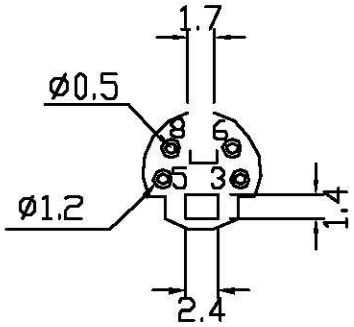

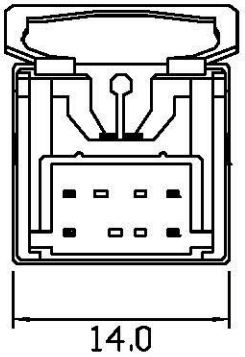

MDJ-FS-04-LF
LEADFREE

RoHS Compliant

NO.	NAME	MATERIAL	FINISH	Q'TY	REMARK
1	HOUSING	PBT G.F.	BLACK	1	
2	CONTACT	PHOS. BRONZE T:0.2	GOLD-TIN PLATED	4	Gold:1~3u"; Ni:40~60u"; TIN:120u" (100% pure Tin of lead free plating)
3	SHIELD	BRASS T:0.3	TIN PLATED	1	TIN:120~200u"
4	BOTTOM COVER	PBT G.F.	BLACK	1	
5	SPRING SHIELD	STAINLESS T:0.2		1	

All Connectors
www.allconnectors.de
Tel.: 0049 711 7000503
70704 Filderstadt - Germany
info@allconnectors.de
Fax: 0049 711 7000504
Kettemerstr. 25

PART NO. MDJ-FS-04					
DWG NO. MDJ-FS-04	CHECKED BY CY	TOLERANCES ARE .X ± 0.2 .XX ± 0.1 .XXX ± AWG	DESCRIP TION:	MINI DIN JACK	
FILE NO.	DRAWING BY				
UNIT / mm / SCALE 1:1	PROJECTION		AREA	REVISIONS / HK	DATE