This document is the property of Nian-Yeong Corporation and is delivered on the express condition that it is not to be disclosed, reproduced or used, in whole or in part, for manufacture or sale by anyone other than Nian-Yeong Corporation without its prior consent, and that no right is granted to disclose or to use any information in this document.

CUSTOMER DRAWING

REV.	DESCRIPTION	APPVL. BY	DATE	ECN NO.
A	RELEASE	Fido Weng	14/03/11'	
B				
C				

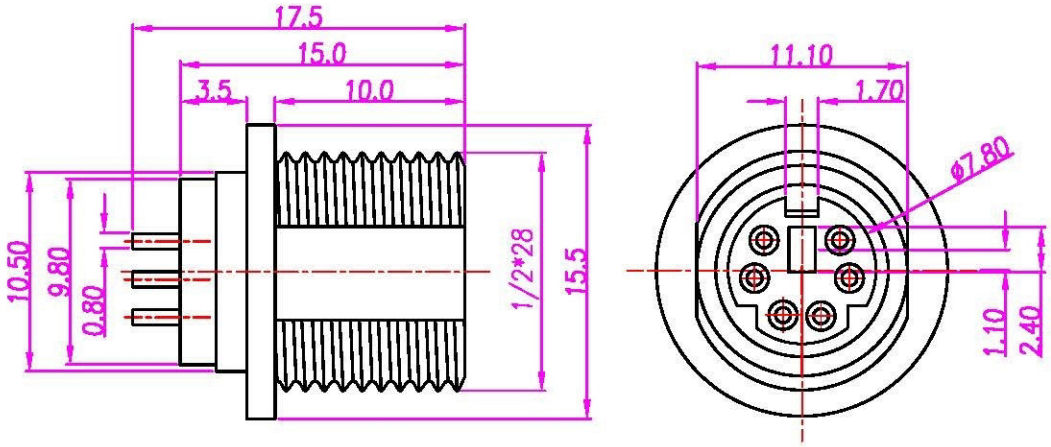

1. MATERIAL :
   - 1-1. HOUSING : PBT UL94V-0
     COLOR : BLACK
   - 1-2. CONTACT : PHORPHOR BRONZE
   - 1-3. SHELL : BRASS.
   - 1-4. NUT : BRASS.
   - 1-5. GASKET : STAINLESS
2. FINISH :
   - 2-1. CONTACT : GOLD FLASH
   - 2-2. SHELL : NICKEL PLATED.
   - 2-2. NUT : NICKEL

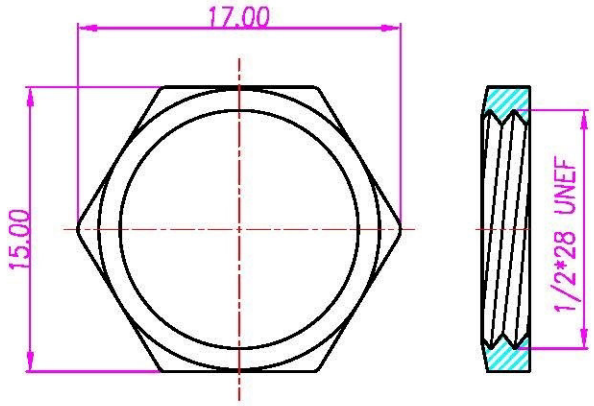

NUT

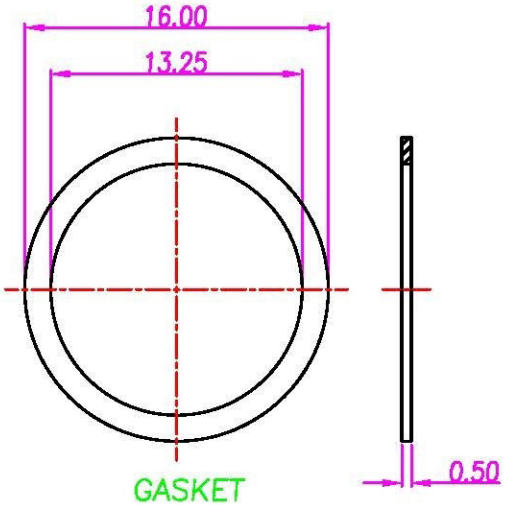

GASKET

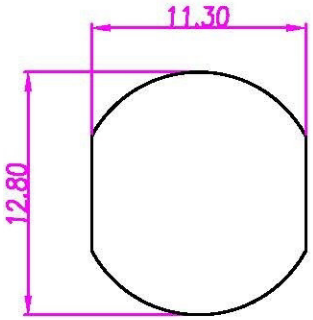

PANEL CUT-OUT

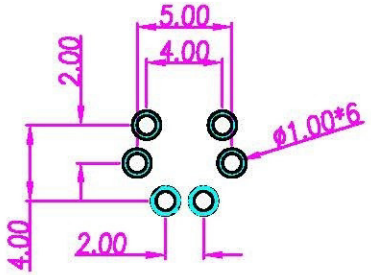

RECOMMD P.C.B LAYOUT

DRAW	Jen Xie	APPVL	Emily Suen	UNIT	mm	TOLERANCE x ±0.10, xx ±0.05, xxx ±0.03, xxxx ±0.01, ANGULA ±1°	All Connectors	TITLE	MINI DIN 6PIN(F) 1/2-28 [redacted]		SHEET
CHECK	Emily Suen			SCALE	1:1		www.allconnectors.de Tel: 0049 211 409808 40591 Düsseldorf - Germany info@allconnectors.de Fax: 0049 211 409809 Kettenmeerstr. 25	PART NO.	MD-06F1-16	DWG NO. QC5276	VERSION A