This document is the property of Nian-Yeong Corporation and is delivered on the express condition that it is not to be disclosed, reproduced or used, in whole or in part, for manufacture or sale by anyone other than Nian-Yeong Corporation without its prior consent, and that no right is granted to disclose or to use any information in this document.

CUTOMER DRAWING

REV.	DESCRIPTION	APPROVED BY	DATE	ECN NO.
A	RELEASE TO PRODUCTION	Fido Weng	01/01/10"	ECN10132
B				
C				

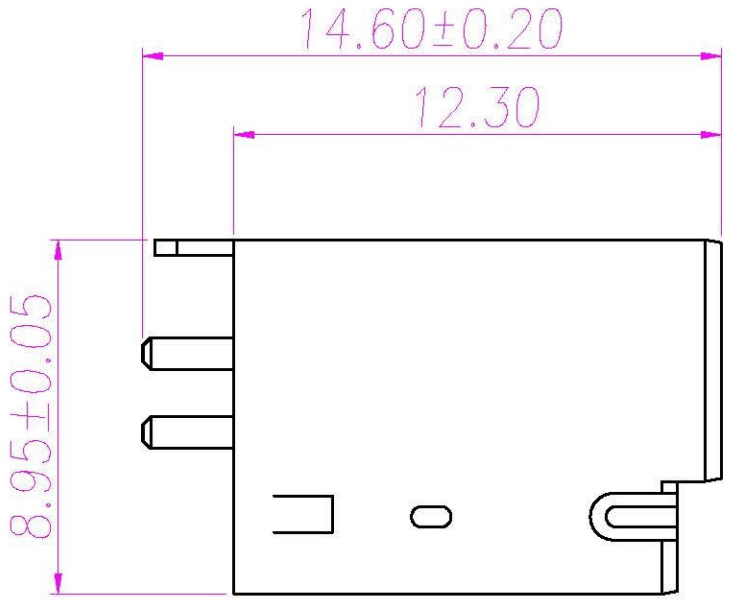

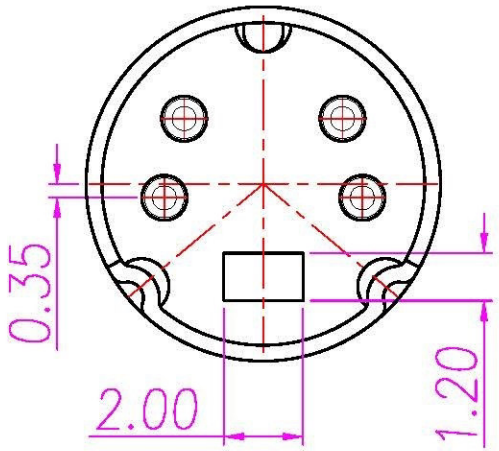

備註 /NOTE:

1.安規 /SAFETY:
- 1–1.規格 /RATING: 100V AC MAX or 12V DC 2A MAX
- 1–2.絶緣阻抗 /INSULATION RESISTANCE: 50MΩMIN at 250V DC
- 1–3.絶緣耐壓 /WITHSTANDING: 250V AC at 1 MINUTE

2.材質/MATERIAL:
- 2–1.膠芯 /HOUSING: PBT (黑色 /BLACK)
- 2–2.針/PIN: 黃銅 /BRASS
- 2–3.銅管 /SHELL: 黃銅 /BRASS

3.電鍍 /PLATING:
- 3–1.針 /PIN: SEE TABLE A
- 3–2.銅管 /SHELL: SEE TABLE A

4.拉拔力 /STRENGTH:
- 4–1.退針拉力/STRENGTH of UNLOAD PIN:2.5kgf MIN

TABLE A

	MD–04M1–14	表金 / GOLD FLASH	表金 / GOLD FLASH
	MD–04M1–13	表金 / GOLD FLASH	鎳 30u"/NICKEL 30u"
	MD–04M1–05	銀 / SILVER	鎳 30u"/NICKEL 30u"
	P/N	針 : 電鍍	銅管 : 電鍍

DRAWN	Jen Xie	APP'D	Fido Weng	UNIT	mm	TOLERANCE x ±0.20, xx ±0.10, xxx ±0.05, xxxx ±0.03, ANGULA ±1°	All Connectors www.allconnectors.de Tel.: 0049 /711 4009508 70794 Filderstadt Germany info@allconnectors.de Fax: 0049 /711 4009541 Kellerstraße 25	TITLE	MiniDin 4(M)MBK		SHEET
CHK'D	Emily Suen			SCALE	1:1			PART NO.	TABLE A	DWG NO. QC5103	VERSION A