This document is the property of Nian-Yeong Corporation and is delivered on the express condition that it is not to be disclosed, reproduced or used, in whole or in part, for manufacture or sale by anyone other than Nian-Yeong Corporation without its prior consent, and that no right is granted to disclose or to use any information in this document.

CUSTOMER DRAWING

REV.	DESCRIPTION	APPROVED BY	DATE	ECN NO.
A	RELEASE	Fido Weng	11/02/10"	
B	CHANGE DIM.	Emily Suen	08/09/11"	ECN11050
C				

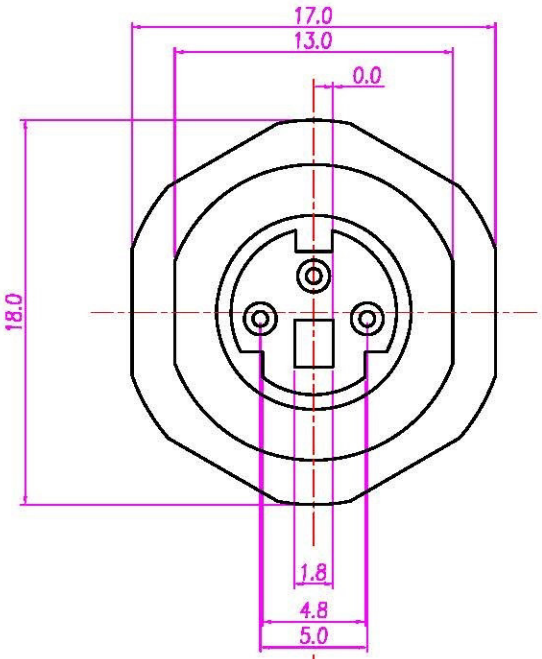

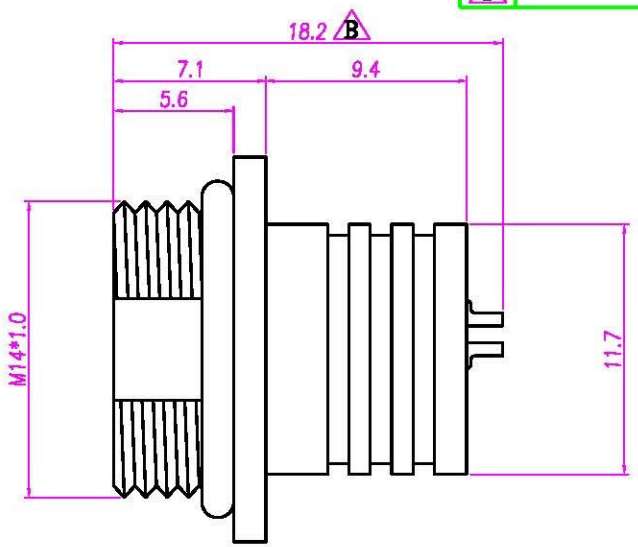

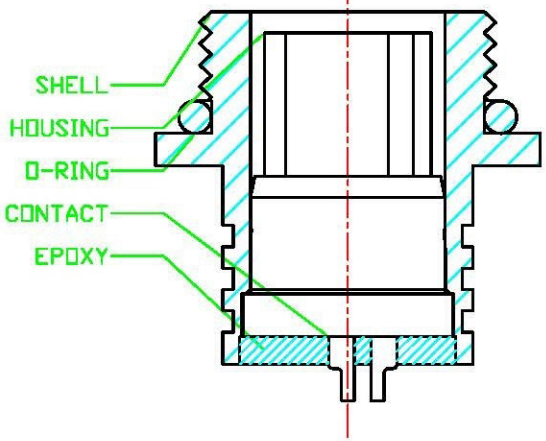

1. MATERIAL :
   - 1-1. HOUSING : PBT UL94V-0 ; COLOR : BLACK
   - 1-2. CONTACT : PHOSPHOR BRONZE
   - 1-3. SHELL : BRASS
   - 1-4. O-RING : EPDM ; COLOR : BLACK
   - 1-5. EPOXY BASE : EF400A&EF400B.COLOR:BLACK
2. FINISH :
   - 2-1. CONTACT AREA : GOLD FLASH
     SOLDER AREA : MATTE-TIN.
   - 2-2. SHELL : NICKEL PLATED.
3. ELECTRICAL SPECIFICATION :
   - 3-1. Rated current : 2A
   - 3-2. Rated Voltage : 12V
   - 3-3. Water proof: IPX7
4. Environmental :
   - 4-1. Operation Temperature : -20 ℃~85℃

DRAWN	Ku Chou	APP'D	Fido Weng	UNIT	mm	TOLERANCE .x ±0.20 .xx ±0.10 .xxx ±0.05 .xxxx ±0.03 ANGULA ±1°	All Connectors	TITLE	MiniDin 3(F)		SHEET
CHK'D	Emily Suen			SCALE	1:1		www.allconnectors.de Tel.: 0049 711 7005303 70794 Filderstadt - Germany info@allconnectors.de Fax: 0049 711 7009301 Kettemerstr. 25	PART NO.	MD-03F1-07	DWG NO. QC4651	VERSION B