NO	DESCRIPTION	MATERIAL	Q'TY	FINISH	REMARK
1	NUT	BRASS	1	NICKEL	N-0004-N
2	BODY 1	BRASS	1	NICKEL	B-TNC0030-N
3	INSULATION	TEFLON	1	TEFLON	I-0089T
4	INSULATION	TEFLON	1	TEFLON	I-0448T
5	GASKET	RUBBER	1	RUBBER	RU-0006
6	PIN	BRASS	1	GOLD	P-TNC0019-G
7	WASHER	BRASS	1	NICKEL	W-0001-N
8	NUT	BRASS	1	NICKEL	N-0003-N
9	BODY 2	BRASS	1	GOLD	B-BNC0561-N

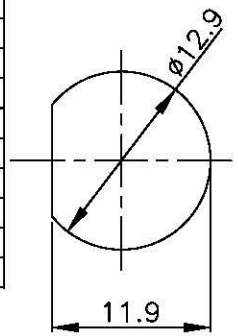

MOUNTING HOLES

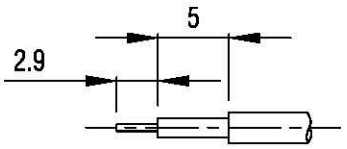

(Recommended Stripping Dimension)

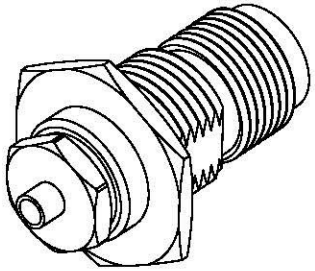

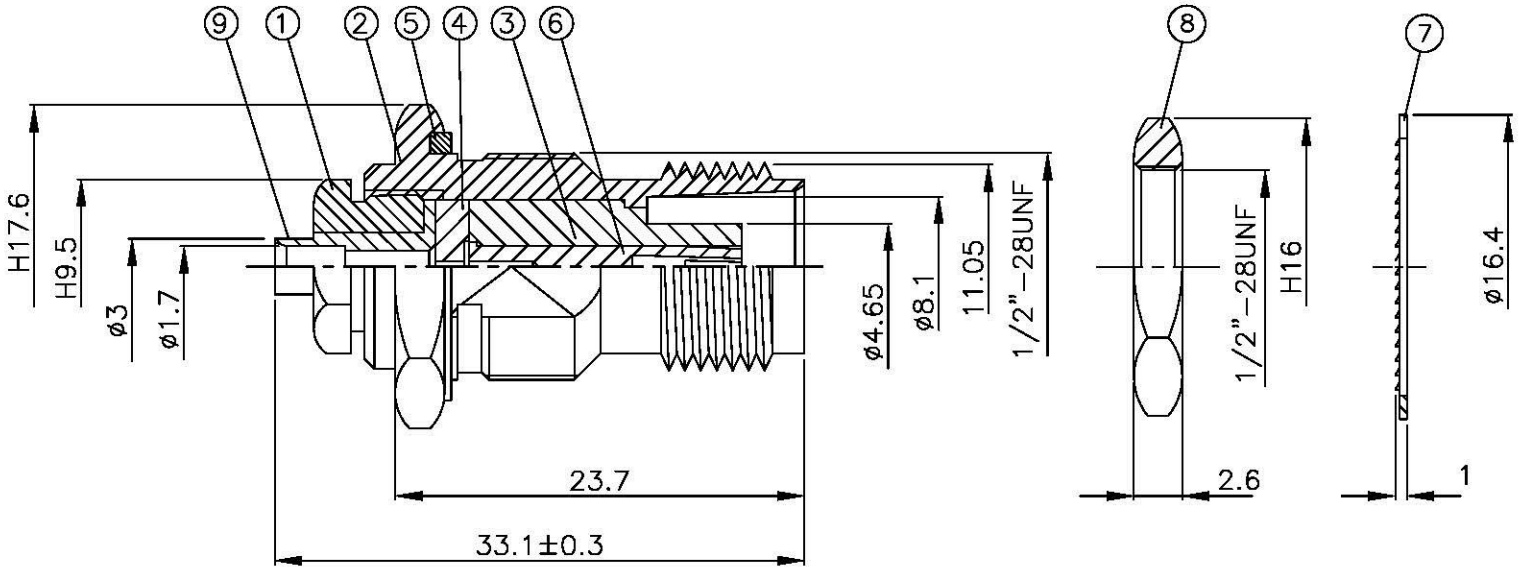

All Connectors

TITLE TNC BULKHADE FEMALE SOLDER FOR RG-405 (.082)

PART NO. TNC-07V1-TGN

DRAWING NO. TNC 07V1 TGN

DRAWN	MARY	DATE	96.02.08
CHECKED	黃巧君	DATE	
Q.A.	蘇姿潔	DATE	
APPROVAL	徐燦霖	DATE	
REVISION		DATE	

DIMENSIONS ARE IN MILLMETERS

UNLESS OTHERWISE SPECIFIED TOLERANCES

0.5-5=±0.2	120-315=±1
5-30=±0.4	315-1000=±1.6
30-120=±0.6	1000-2000=±2.4

SCALE	4:1	SIZE	A

REVISION	
DESCRIPTION	ENGINEER