NO	DESCRIPTION	MATERIAL	Q'TY	FINISH	REMARK
1	BODY 1	BRASS	1	GOLD	B-SSMC0470-G
2	INSULATION 1	TEFLON	1	TEFLON	I-0051T
3	PIN	BE CU	1	GOLD	P-SSMC0316-G
4	INSULATION 2	TEFLON	1	TEFLON	I-0225T
5	BODY 2	BE CU	1	GOLD	B-SSMC0464-G
6	BODY 3	BRASS	1	GOLD	B-SSMC0465-G
7	RING	BRASS	1	GOLD	R-0033-G

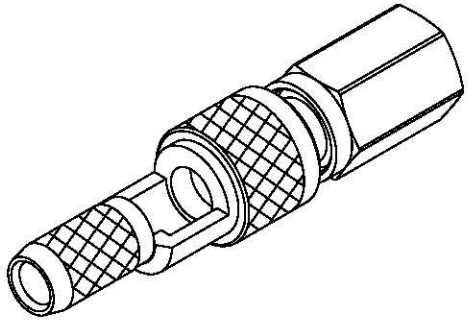

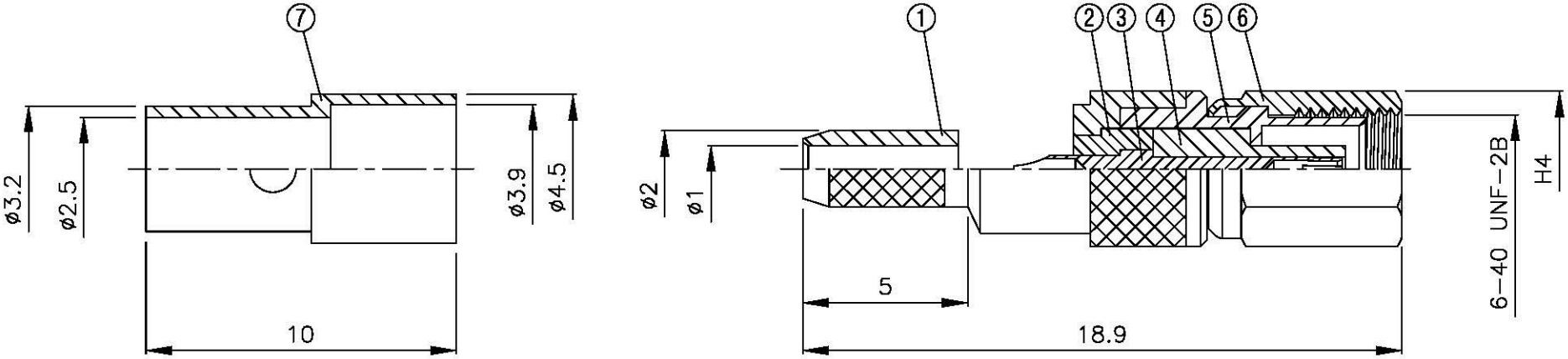

All Connectors

www.allconnectors.de
Tel.: 0049 711 7008308
70791 Filderstadt - Germany

info@allconnectors.de
Fax: 0049 711 7008304
Kellerstraße 25

TITLE	SSMC FEMALE CRIMP FOR RG 178/U		
PART NO.	SSMC-01M-TGG		
DRAWING NO.	SSMC 01M TGG		

DRAWN	MARY	DATE	96.07.09
CHECKED	蘇志欣	DATE	
Q.A.	蘇姿潔	DATE	
APPROVAL	徐燦霖	DATE	
REVISION		DATE	

DIMENSIONS ARE IN MILLMETERS

UNLESS OTHERWISE SPECIFIED TOLERANCE

0.5-5=±0.2	120-315=±1
5-30= ±0.4	315-1000=±1.6
30-120±0.6	1000-2000=±2.4

SCALE	4:1	SIZE	A

REVISION	
DESCRIPTION	ENGINEER