NO	DESCRIPTION	MATERIAL	Q'TY	FINISH	REMARK
1	BODY 1	BRASS	1	GOLD	B-SMB0602-G
2	INSULATION 1	TEFLON	1	TEFLON	I-0053T
3	PIN	BE CU	1	GOLD	P-SMB0394-G
4	BODY 2	BRASS	1	GOLD	B-SMB0479-G
5	BODY 3	BRASS	1	GOLD	B-SMB0245-G
6	WASHER 2	BE CU	1	NICKEL	W-0035-N
7	INSULATION 2	TEFLON	1	TEFLON	I-0280T
8	BODY 4	BRASS	1	GOLD	B-SMB0635-G
9	RING	BRASS	1	GOLD	R-0058-G

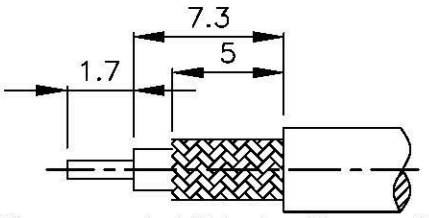

(Recommended Stripping Dimmension)

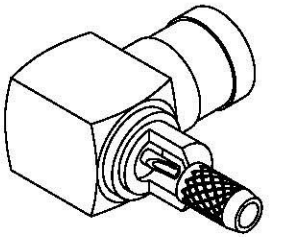

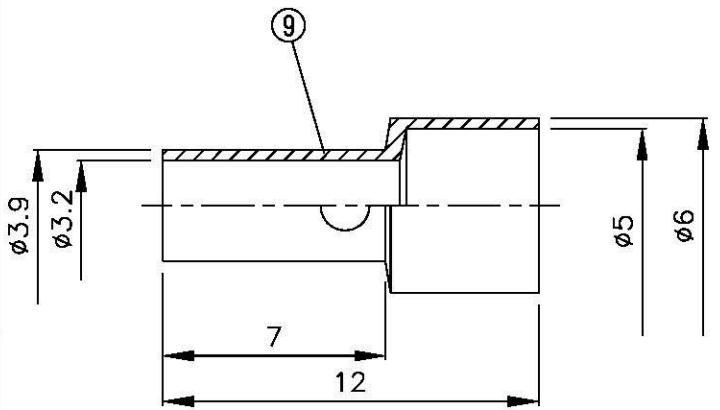

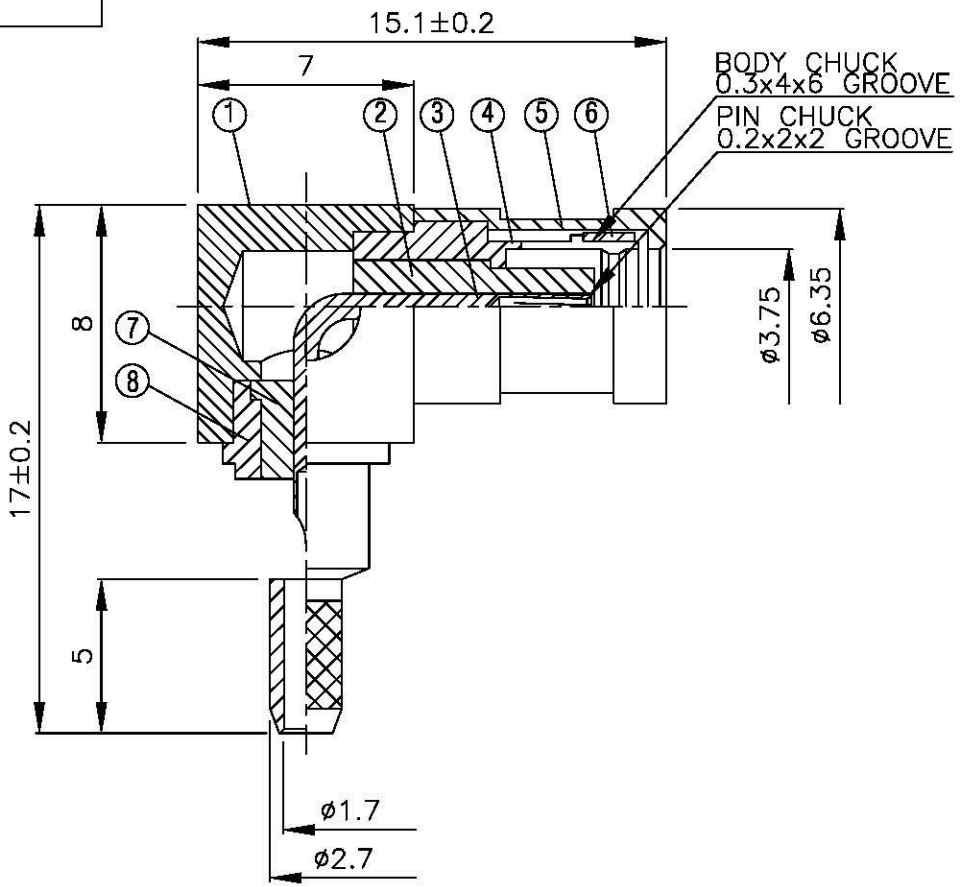

All Connectors

www.allconnectors.de
Tel.: 0049 711 7009503
70794 Filderstadt Germany

info@allconnectors.de
Fax: 0049 711 7009504
Kettemerstr. 25

TITLE	SMB FEMALE ANGLE CRIMP FOR RG-174/U		
PART NO.	SMB-19LV1-TGG		
DRAWING NO.	SMB 19LV1 TGG		

DRAWN	MARY	DATE	96.03.12
CHECKED	黃巧君	DATE	
Q.A.	蘇姿潔	DATE	
APPROVAL	徐燦霖	DATE	
REVISION		DATE	

DIMENSIONS ARE IN MILLMETERS

UNLESS OTHERWISE SPECIFIED TOLERANCE

0.5-5=±0.2	120-315=±1
5-30= ±0.4	315-1000=±1.6
30-120=±0.6	1000-2000=±2.4

SCALE 4:1 SIZE A

REVISION

DESCRIPTION	ENGINEER