NO	DESCRIPTION	MATERIAL	Q'TY	FINISH	REMARK
1	BODY 1	BRASS	1	NICKEL	B-SMA0317-N
2	PIN	BE CU	1	GOLD	P-SMA0251-G
3	INSULATION	TEFLON	1	TEFLON	I-0185T
4	BODY 2	BRASS	1	NICKEL	B-SMA0399-N
5	INSULATION	TEFLON	1	TEFLON	I-0151T

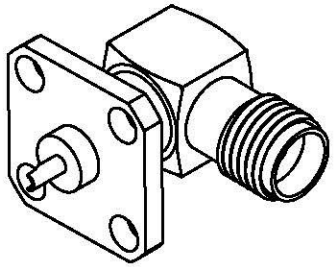

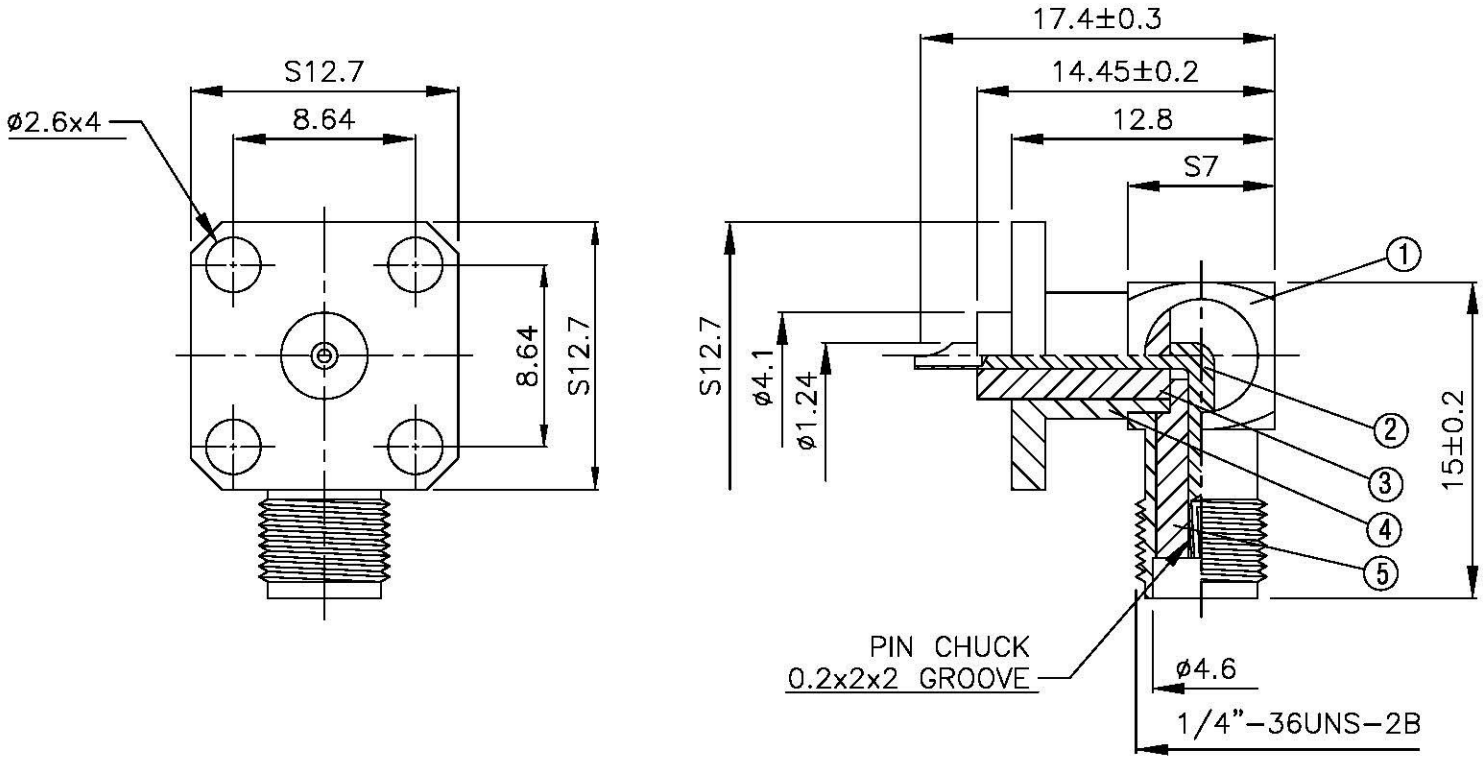

All Connectors

TITLE SMA RIGHT ANGLE JACK 4 HOLES FLANGE MOUNT

PART NO. SMA-41V4-TGN

DRAWING NO. SMA 41V4 TGN

DRAWN	MARY	DATE	96.03.15
CHECKED	黃巧君	DATE	
Q.A.	蘇姿潔	DATE	
APPROVAL	徐燦霖	DATE	
REVISION		DATE	

DIMENSIONS ARE IN MILLMETERS

UNLESS OTHERWISE SPECIFIED TOLERANCE

0.5-5=±0.2 120-315=±1

5-30= ±0.4 315-1000=±1.6

30-120=±0.6 1000-2000=±2.4

SCALE 4:1 SIZE A

REVISION	
DESCRIPTION	ENGINEER