NO	DESCRIPTION	MATERIAL	Q'TY	FINISH	REMARK
1	SHELL	BRASS	1	NICKEL	B-SMA0043-G
2	GASKET	SI RUBBER	1	RUBBER	RU-0008
3	INSULATION	TEFLON	1	TEFLON	I-0133T
4	WASHER	PH.BRONZE	1	NICKEL	W-0012
5	BODY	BRASS	1	NICKEL	B-SMA0095-G
6	PIN	BRASS	1	GOLD	P-SMA0061-G

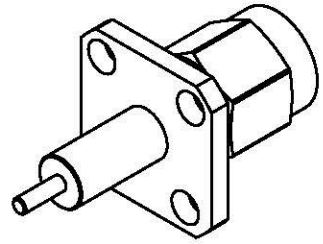

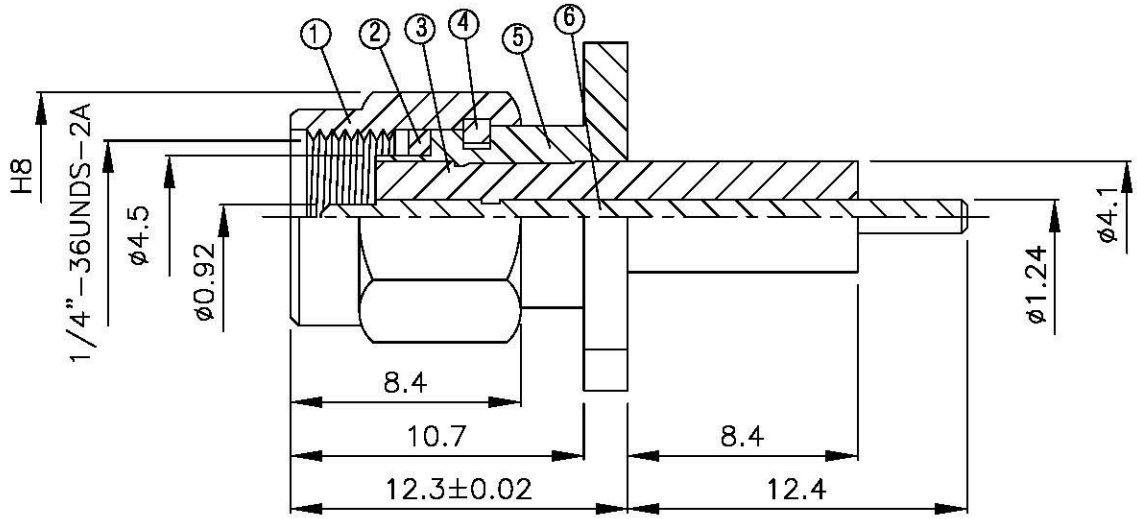

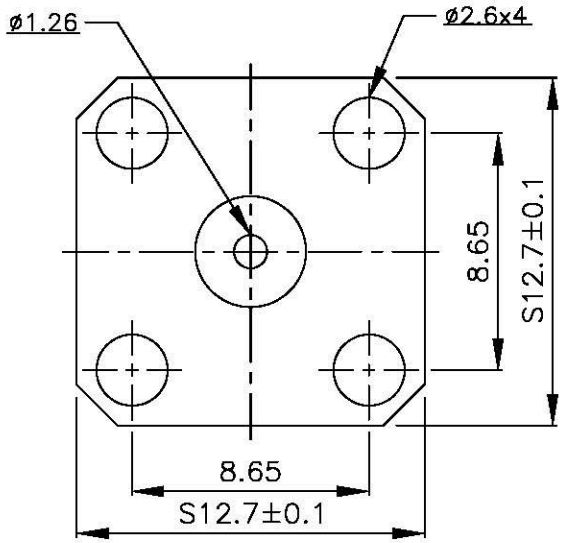

All Connectors
www.allconnectors.de
Tel.: 0049 711 7009503
70794 Filderstadt - Germany
info@allconnectors.de
Fax: 0049 711 7009504
Kettenäckerstr. 25

TITLE
SMA MALE PANEL RECEPTACLE

PART NO. SMA-33V4-TGN

DRAWING NO. SMA 33V4 TGN

DRAWN	MARY	DATE	96.03.15
CHECKED	黃巧君	DATE	
Q.A.	蘇姿潔	DATE	
APPROVAL	徐燦霖	DATE	
REVISION		DATE	

DIMENSIONS ARE IN MILLMETERS

UNLESS OTHERWISE SPECIFIED TOLERANCE

0.5-5=±0.2	120-315=±1
5-30= ±0.4	315-1000=±1.6
30-120±0.6	1000-2000=±2.4

SCALE 4:1 SIZE A

REVISION	
DESCRIPTION	ENGINEER