NO	DESCRIPTION	MATERIAL	Q'TY	FINISH	REMARK
1	BODY	BRASS	1	GOLD	B-SMA0714-G
2	INSULATION	TEFLON	1	TEFLON	I-0376T
3	PIN	BE CU	1	GOLD	P-SMA0975-G

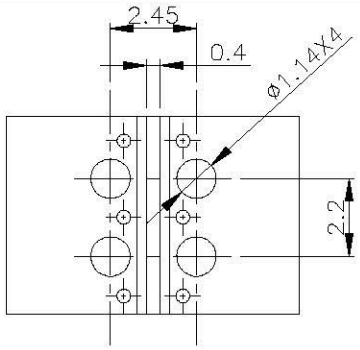

PC MONUTING

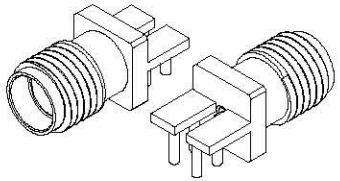

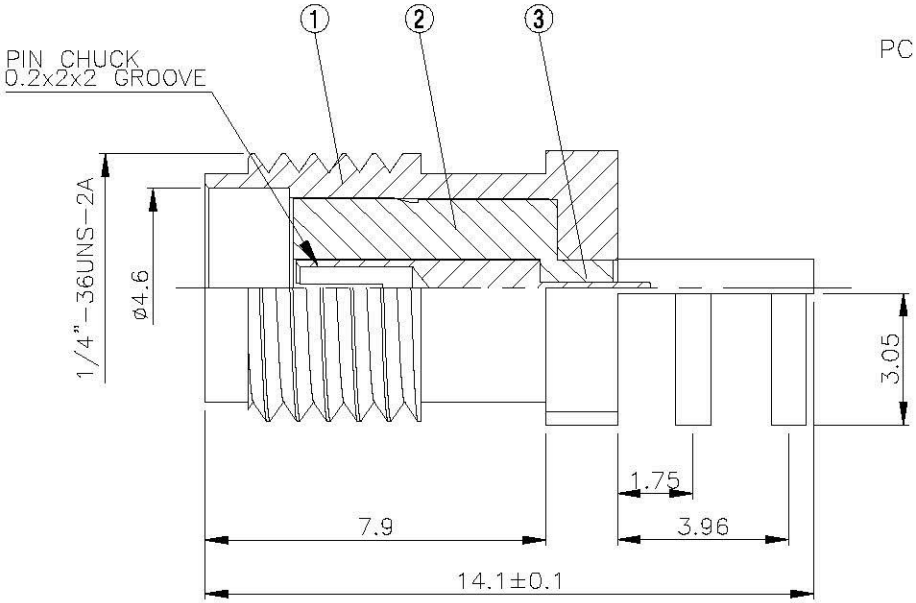

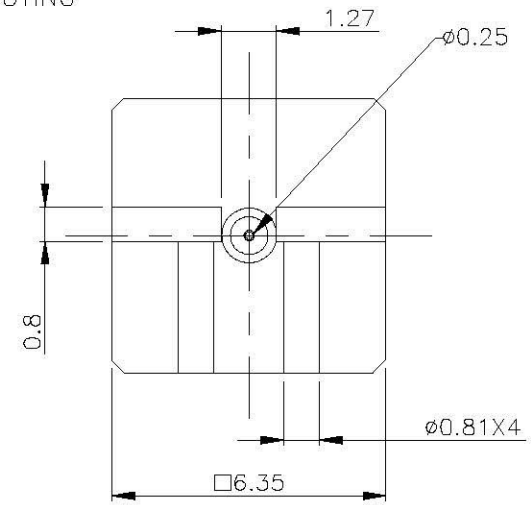

All Connectors

www.allconnectors.de
Tel.: 0049 711 7989506
70794 Filderstadt - Germany

info@allconnectors.de
Fax: 0049 711 7989504
Kettenwerstr. 25

TITLE	SMA FEMALE RECEPTACLE PC MOUNT		
PART NO.	SMA-10V33-TGG		
DRAWING NO.	SMA-10V33-TGG		

DRAWN	蘇志欣	DATE	98.04.24
CHECKED	蘇姿潔	DATE	
Q.A.	林妙樺	DATE	
APPROVAL	徐燦霖	DATE	
REVISION		DATE	

DIMENSIONS ARE IN MILLMETERS

UNLESS OTHERWISE SPECIFIED TOLERANCE

0.5-5=±0.2	120-315=±1
5-30= ±0.4	315-1000=±1.6
30-120±0.6	1000-2000=±2.4

SCALE	4:1	SIZE	A

REVISION	
DESCRIPTION	ENGINEER