NO	DESCRIPTION	MATERIAL	Q'TY	FINISH	REMARK
1	NUT	BRASS	1	GOLD	N-0006-G
2	WASHER	BRASS	1	GOLD	W-0016-G
3	GASKET	SI RUBBER	1	RUBBER	RU-0014
4	INSULATION	TEFLON	1	TEFLON	I-0131T
5	BODY	BRASS	1	GOLD	B-SMA0205-G
6	PIN	BE CU	1	GOLD	P-SMA0635-G
7	INSULATION	TEFLON	1	TEFLON	I-0256T
8	BODY	BRASS	1	GOLD	B-SMA0903-G

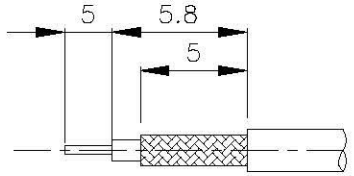

(Recommended Stripping Dimmension)

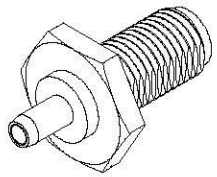

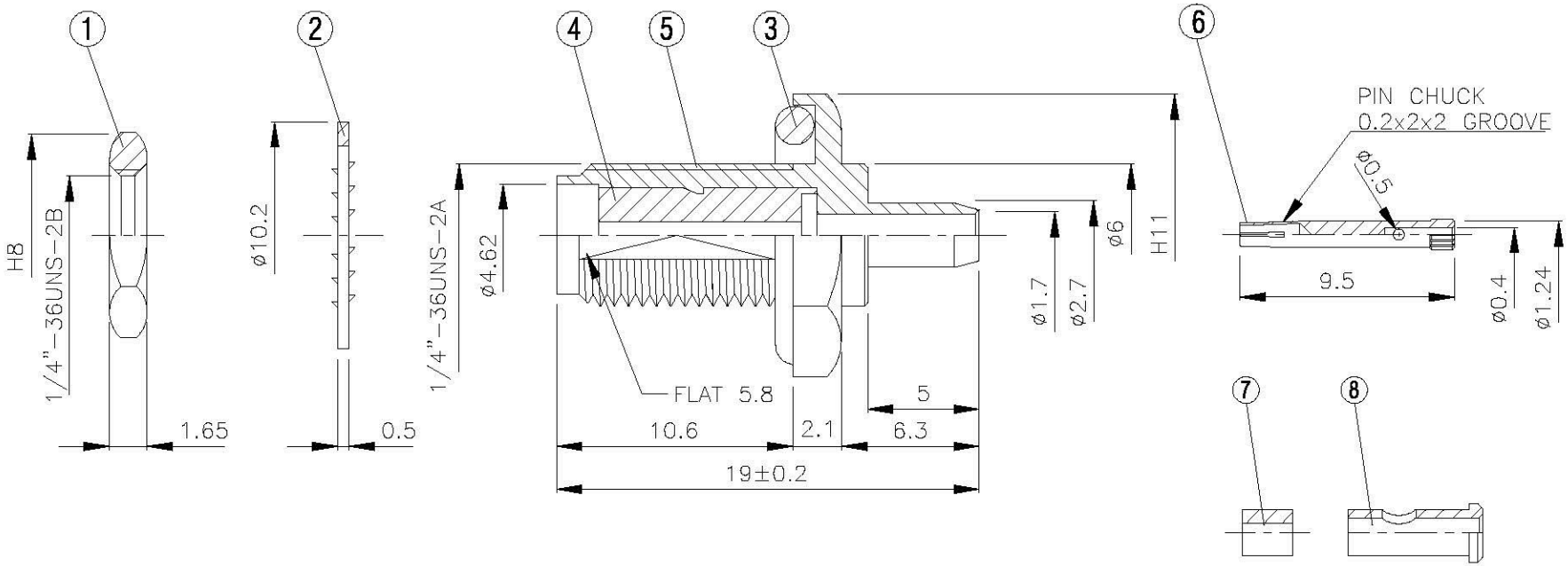

All Connectors	DRAWN MARY	DATE 96.03.20	DIMENSIONS ARE IN MILLMETERS
TITLE SMA FEMALE CRIMP FOR HRS 0.8mm	CHECKED 蘇姿潔	DATE	UNLESS OTHERWISE SPECIFIED TOLERANCE
PART NO. SMA-05U2-TGG	Q.A. 馮健華	DATE	0.5-5=±0.2 120-315=±1
DRAWING NO. SMA 05U2 TGG	APPROVAL 徐燦霖	DATE	5-30= ±0.4 315-1000=±1.6
	REVISION	DATE	30-120=±0.6 1000-2000=±2.4
			SCALE 4:1 SIZE A

REVISION	
DESCRIPTION	ENGINEER