NO	DESCRIPTION	MATERIAL	Q'TY	FINISH	REMARK
1	SHELL	BRASS	1	GOLD	B-SMA0043-N
2	GASKET	SI RUBBER	1	RUBBER	RU-0008
3	INSULATION	TEFLON	1	TEFLON	I-0171T
4	WASHER	PH.BRONZE	1	GOLD	W-0012
5	BODY	BRASS	1	NICKEL	B-SMA1727-N
6	PIN	BRASS	1	NICKEL	P-SMA0223-G
7	INSULATION	TEFLON	1	TEFLON	I-0047T
8	BODY	BRASS	1	NICKEL	B-SMA1728-N
9	NUT	BRASS	1	NICKEL	N-0036-N

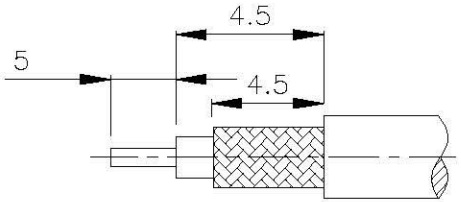

(Recommended Stripping Dimmension)

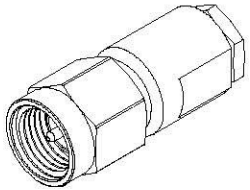

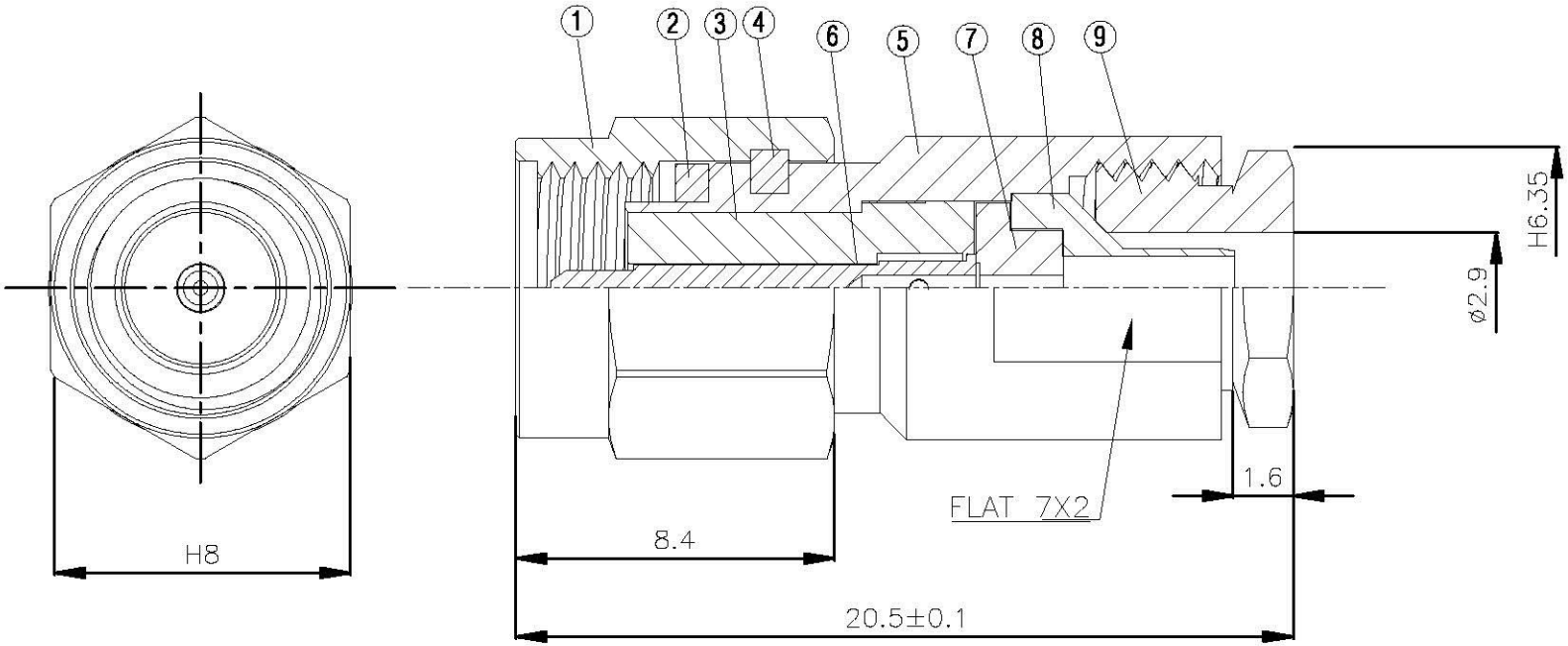

All Connectors	DRAWN 蘇姿潔	DATE 100.01.19	DIMENSIONS ARE IN MILLMETERS		REVISION
TITLE SMA MALE CLAMP FOR RG-174/U	CHECKED 蘇志欣	DATE	UNLESS OTHERWISE SPECIFIED TOLERANCE		DESCRIPTION / ENGINEER
	Q.A. 莊千慧	DATE	0.5-5=±0.2 / 120-315=±1		
PART NO. SMA-01LV1-TGN	APPROVAL 徐燦霖	DATE	5-30=±0.4 / 315-1000=±1.6		
DRAWING NO. SMA-01LV1-TGN	REVISION	DATE	30-120=±0.6 / 1000-2000=±2.4		
			SCALE 4:1	SIZE A	