NO	DESCRIPTION	MATERIAL	Q'TY	FINISH	REMARK
1	NUT	BRASS	1	NICKEL	N-0006
2	WASHER	BRASS	1	NICKEL	W-0016
3	GASKET	SI RUBBER	1	RUBBER	RU-0014
4	INSULATION	TEFLON	1	TEFLON	I-0524T
5	BODY	BRASS	1	NICKEL	B-SMA1204-N
6	PIN	BE CU	1	GOLD	P-SMA0867-G
7	RING	BRASS	1	NICKEL	R-0007-N

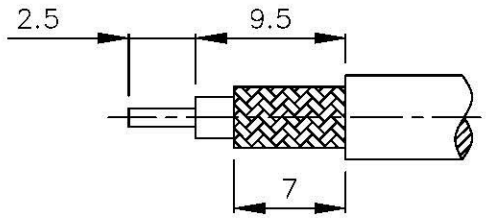

(Recommended Stripping Dimmension)

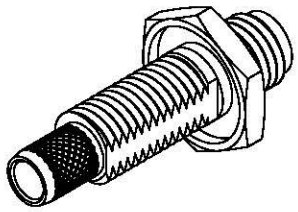

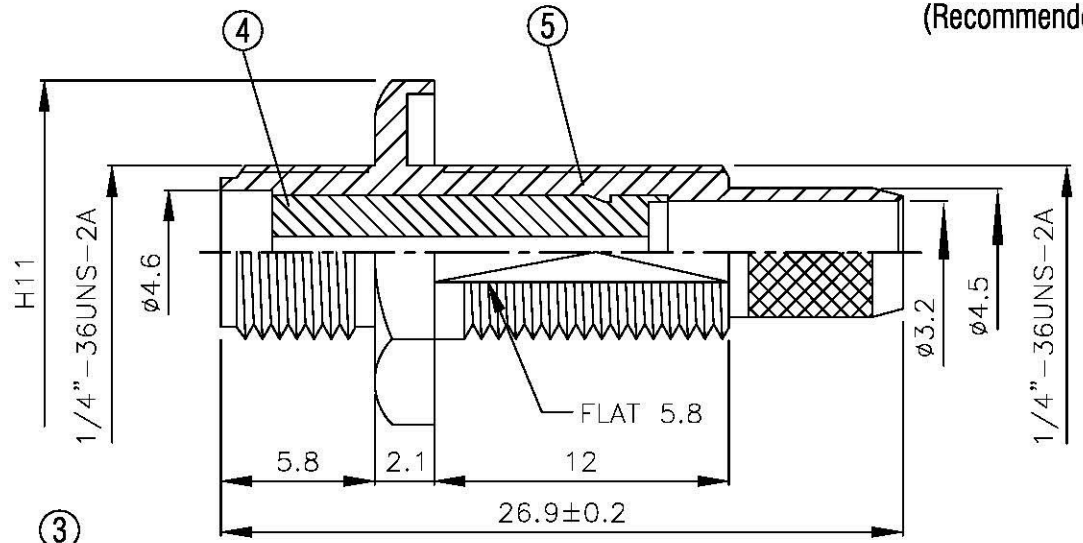

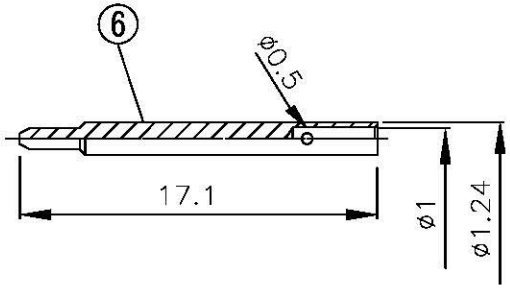

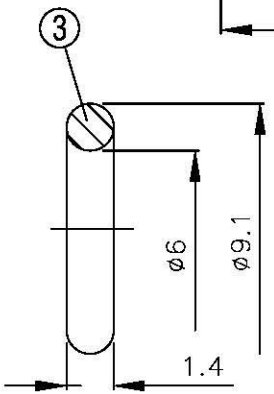

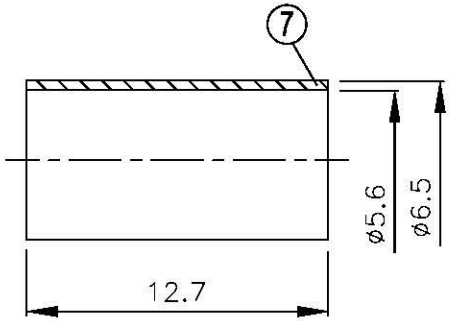

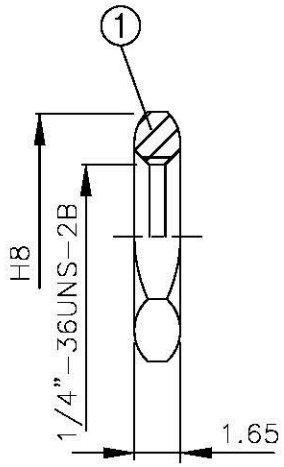

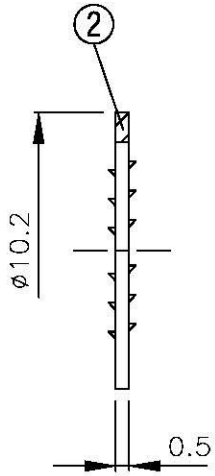

All Connectors

www.allconnectors.de info@allconnectors.de

TITLE SMA FEMALE CRIMP FOR RG-58/U

PART NO. SMA-91F-TGN-RP

DRAWING NO. SMA 91F TGN RP

DRAWN	MARY	DATE	96.08.10
CHECKED	蘇姿潔	DATE	
Q.A.	馮健華	DATE	
APPROVAL	徐燦霖	DATE	
REVISION		DATE	

DIMENSIONS ARE IN MILLMETERS

UNLESS OTHERWISE SPECIFIED TOLERANCE

0.5-5=±0.2	120-315=±1
5-30= ±0.4	315-1000=±1.6
30-120=±0.6	1000-2000=±2.4

SCALE 4:1 SIZE A

REVISION	
DESCRIPTION	ENGINEER