NO	DESCRIPTION	MATERIAL	Q'TY	FINISH	REMARK
1	SHELL	BRASS	1	GOLD	B-SMA0043-G
2	GASKET	SI RUBBER	1	RUBBER	RU-0008
3	INSULATION	TEFLON	1	TEFLON	I-0132T
4	WASHER	PH.BRONZE	1	GOLD	W-0012
5	BODY	BRASS	1	GOLD	B-SMA0095-G
6	PIN	BRASS	1	GOLD	P-SMA0321-G

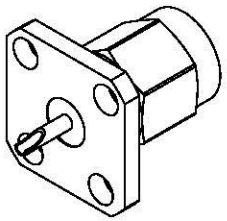

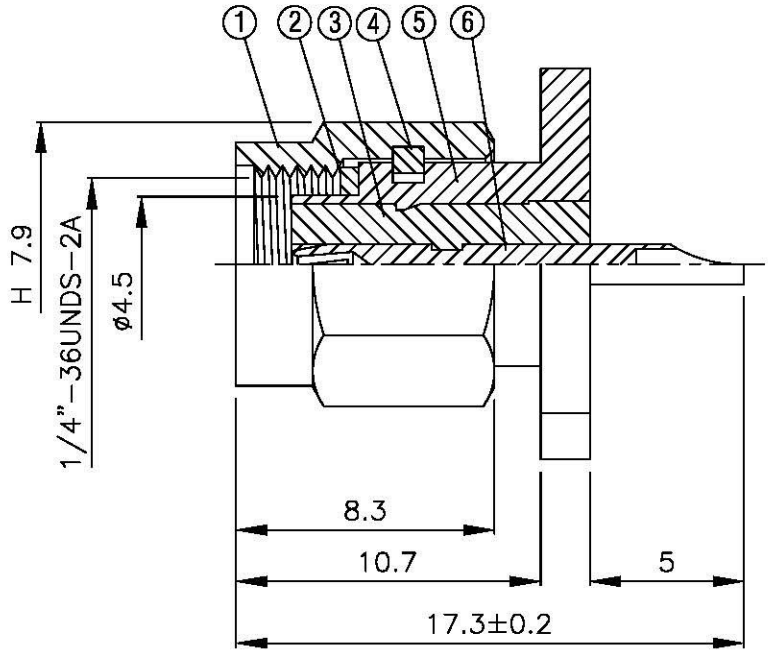

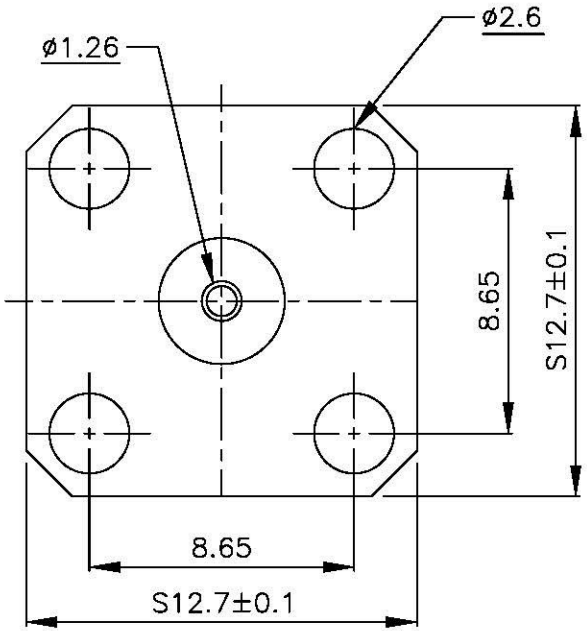

All Connectors

www.allconnectors.de
Tel.: 0049 711 7000503
70794 Filderstadt - Germany
info@allconnectors.de
Fax: 0049 711 7000504
Kettemerstr. 25

TITLE: SMA MALE PANEL RECEPTACLE

PART NO.: SMA-33-TGG-RP

DRAWING NO.: SMA-33-TGG-RP

DRAWN	MARY	DATE	90.01.25
CHECKED	蘇姿潔	DATE	
Q.A.	馮健華	DATE	
APPROVAL	徐燦霖	DATE	
REVISION		DATE	

DIMENSIONS ARE IN MILLMETERS

UNLESS OTHERWISE SPECIFIED TOLERANCE

0.5-5=±0.2	120-315=±1
5-30= ±0.4	315-1000=±1.6
30-120±0.6	1000-2000=±2.4

SCALE 4:1 SIZE A

REVISION	
DESCRIPTION	ENGINEER