NO	DESCRIPTION	MATERIAL	Q'TY	FINISH	REMARK
1	BODY	BRASS	1	NICKEL	B-SMA0066-N
2	PIN	BE CU	1	GOLD	P-SMA0050-G
3	INSULATION	TEFLON	1	TEFLON	I-0126T
4	BODY	BRASS	1	NICKEL	B-SMA0065-N
5	INSULATION	TEFLON	1	TEFLON	I-0127T

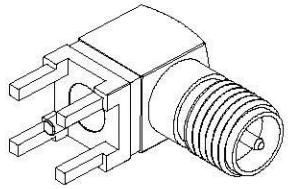

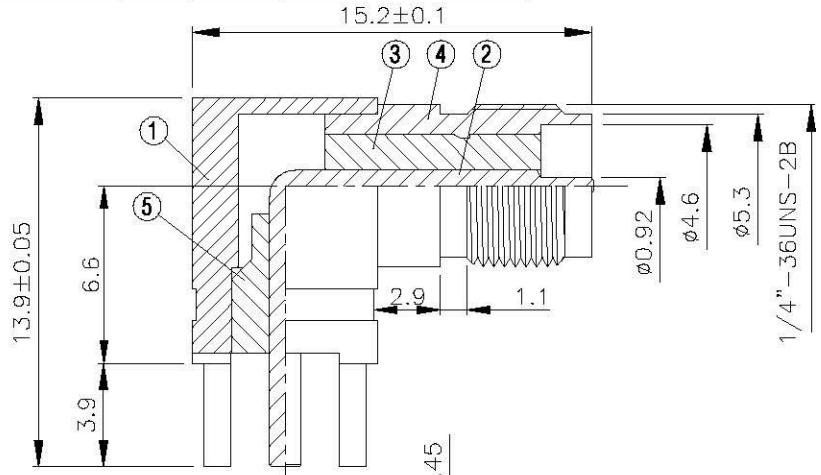

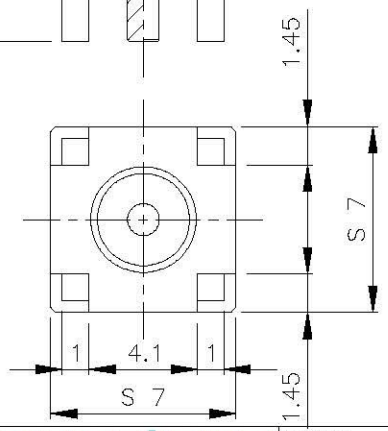

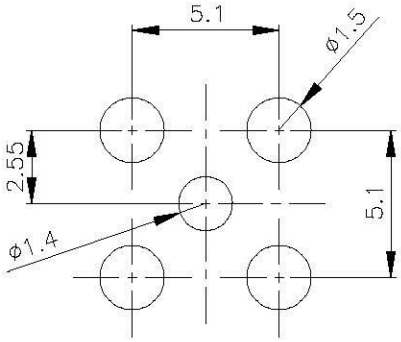

(PC MONUTING)

All Connectors

www.allconnectors.de
Tel.: 0049 711 7009003
70794 Filderstadt - Germany

Info@allconnectors.de
Fax: 0049 711 7009004
Kettelerstr. 23

TITLE	SMA FEMALE PCB MOUMT (REVERSE POLARITY)		
PART NO.	SMA-11-TGN-RP		
DRAWING NO.	SMA 11 TGN-RP		

DRAWN	MARY	DATE	96.03.30
CHECKED	蘇姿潔	DATE	
Q.A.	馮健華	DATE	
APPROVAL	徐燦霖	DATE	
REVISION		DATE	

DIMENSIONS ARE IN MILLMETERS

UNLESS OTHERWISE SPECIFIED TOLERANCE

0.5-5=±0.2	120-315=±1
5-30=±0.4	315-1000=±1.6
30-120=±0.6	1000-2000=±2.4

SCALE	4:1	SIZE	A

REVISION	
DESCRIPTION	ENGINEER