NO	DESCRIPTION	MATERIAL	Q'TY	FINISH
1	PIN	BRASS	1	NICKEL
2	SMALL SCREW	BRASS	1	NICKEL
3	BODY	BRASS	1	NICKEL
4	INSULATION	DELRIN	1	DELRIN
5	CHASSIS	BRASS	1	NICKEL
6	NUT	BRASS	1	NICKEL

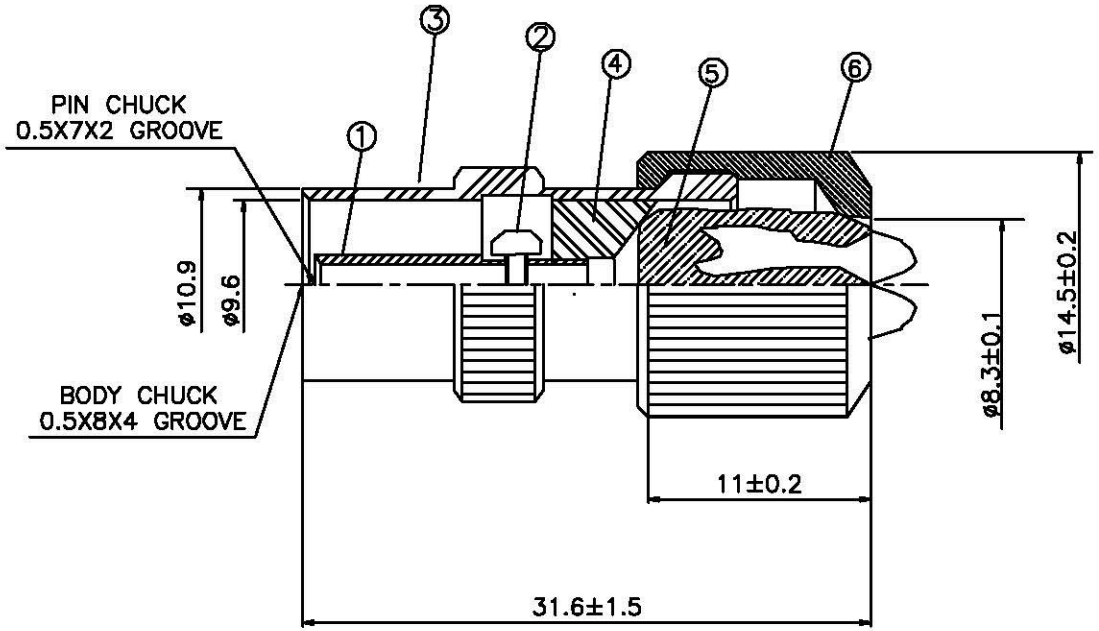

All Connectors

TITLE: PAL FEMALE SCREW

PART NO. PAL-10-DNN

DRAWING NO. PAL 10 DNN

DRAWN	MARY	DATE	96.10.18
CHECKED		DATE	
Q.A.		DATE	
APPROVAL		DATE	
REVISION		DATE	

DIMENSIONS ARE IN MILLMETERS

UNLESS OTHERWISE SPECIFIED TOLERANCE

0.5-5=±0.2 120-315=±1

5-30=±0.4 315-1000=±1.6

30-120=±0.6 1000-2000=±2.4

SCALE 4:1 SIZE A

REVISION	
DESCRIPTION	ENGINEER