NO	DESCRIPTION	MATERIAL	Q'TY	FINISH	REMARK
1	BODY 1	BRASS	1	NICKEL	B-N0629-N
2	INSULATION	TEFLON	1	TEFLON	I-0296T
3	BODY 2	BRASS	1	NICKEL	B-N0033-N
4	WARSHER	BRASS	1	NICKEL	W-0014
5	GASKET	RUBBER	1	RUBBER	RU-0007
6	BODY 2	BRASS	1	NICKEL	B-N0032-N
7	RING	BRASS	1	NICKEL	R-0007-N
8	PIN	BRASS	1	GOLD	P-N0766-G

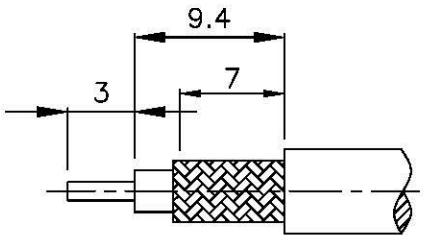

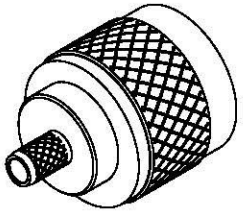

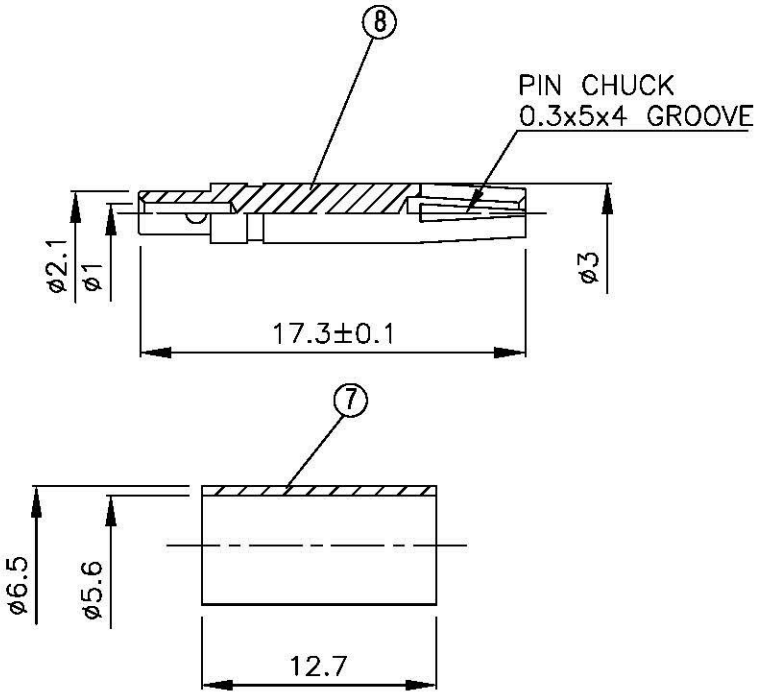

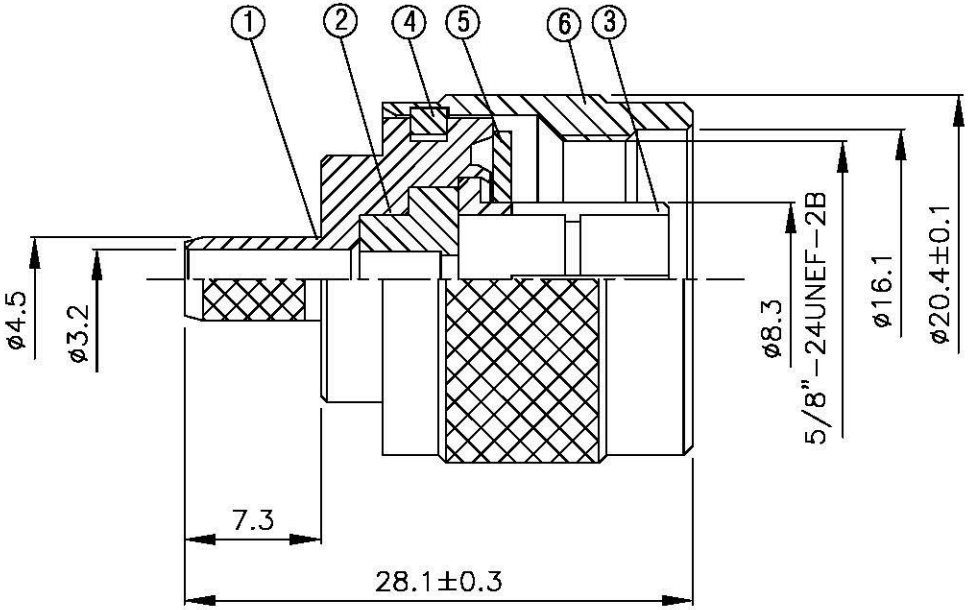

All Connectors	DRAWN MARY	DATE 96.05.04	DIMENSIONS ARE IN MILLMETERS
TITLE N MALE CRIMP FOR RG-58/U	CHECKED 黃巧君	DATE	UNLESS OTHERWISE SPECIFIED TOLERANCE
PART NO. N-03F-TGN-RP	Q.A. 蘇姿潔	DATE	0.5-5=±0.2 120-315=±1
DRAWING NO. N 03F TGN-RP	APPROVAL 徐燦霖	DATE	5-30= ±0.4 315-1000=±1.6
	REVISION	DATE	30-120±0.6 1000-2000=±2.4
			SCALE 4:1 SIZE A

REVISION	
DESCRIPTION	ENGINEER