NO	DESCRIPTION	MATERIAL	Q'TY	FINISH
1	BODY	BRASS	1	NICKEL
2	SHELL	BRASS	1	NICKEL
3	WASHER	BRASS	1	NICKEL
4	WASHER	BRASS	1	NICKEL
5	SPRING	SK-5	1	NICKEL
6	INSULATION	DELRIN	1	DELRIN
7	PIN	BRASS	1	GOLD
8	INSULATION	DELRIN	1	DELRIN

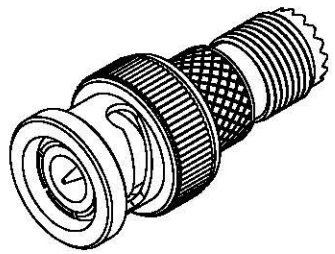

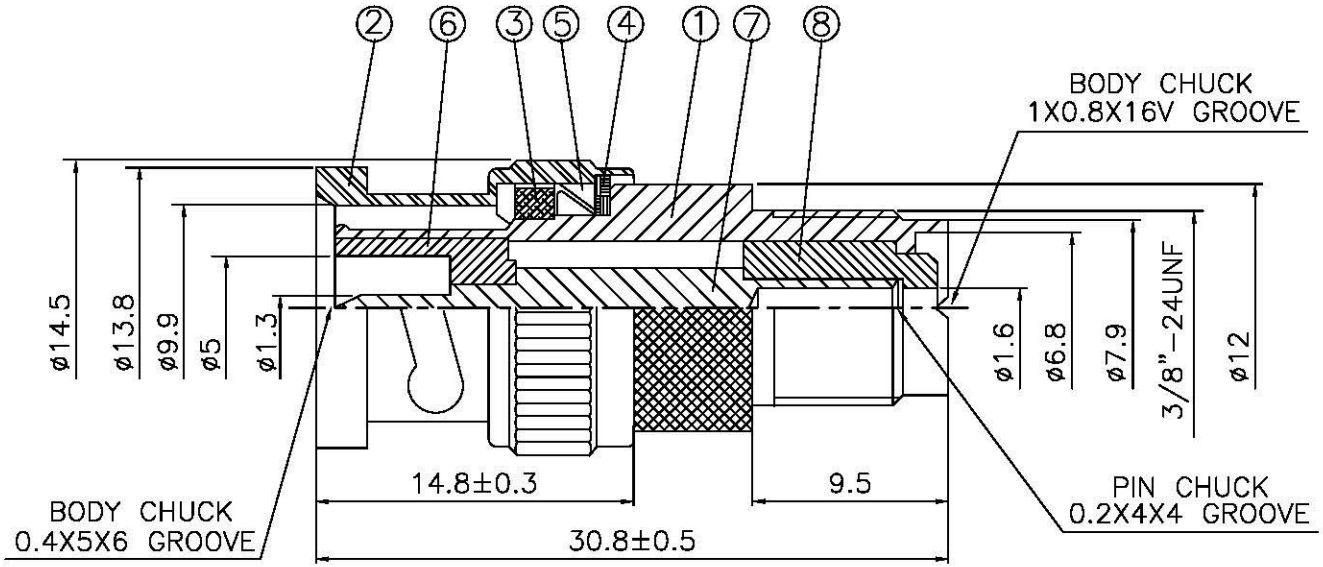

All Connectors

TITLE
MINI UHF FEMALE-BNC MALE

PART NO.
MU-11-DGN

DRAWING NO. MU 11 DGN

DRAWN	DATE	DATE	96.08.30
CHECKED	蘇志欣	DATE	
DATE	蘇姿潔	DATE	
APPROVAL	徐燦霖	DATE	
REVISION		DATE	

DIMENSIONS ARE IN MILLMETERS
UNLESS OTHERWISE SPECIFIED TOLERANCE

0.5-5=±0.2	120-315=±1
5-30=±0.4	315-1000=±1.6
30-120=±0.6	1000-2000=±2.4

SCALE	4:1	SIZE	A

REVISION	
DESCRIPTION	ENGINEER