NO	DESCRIPTION	MATERIAL	Q'TY	FINISH	REMARK
1	SHELL	BRASS	1	NICKEL	B-MU0014-N
2	INSULATION 1	DELRIN	1	DELRIN	I-0048D
3	BODY	BRASS	1	NICKEL	B-FME0516-N
4	INSULATION 2	DELRIN	1	DELRIN	I-0087D
5	PIN	BRASS	1	GOLD	P-FME0346-G

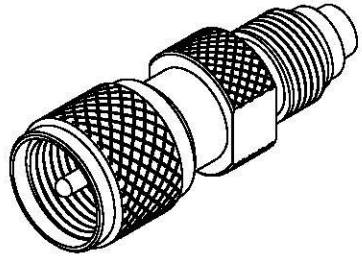

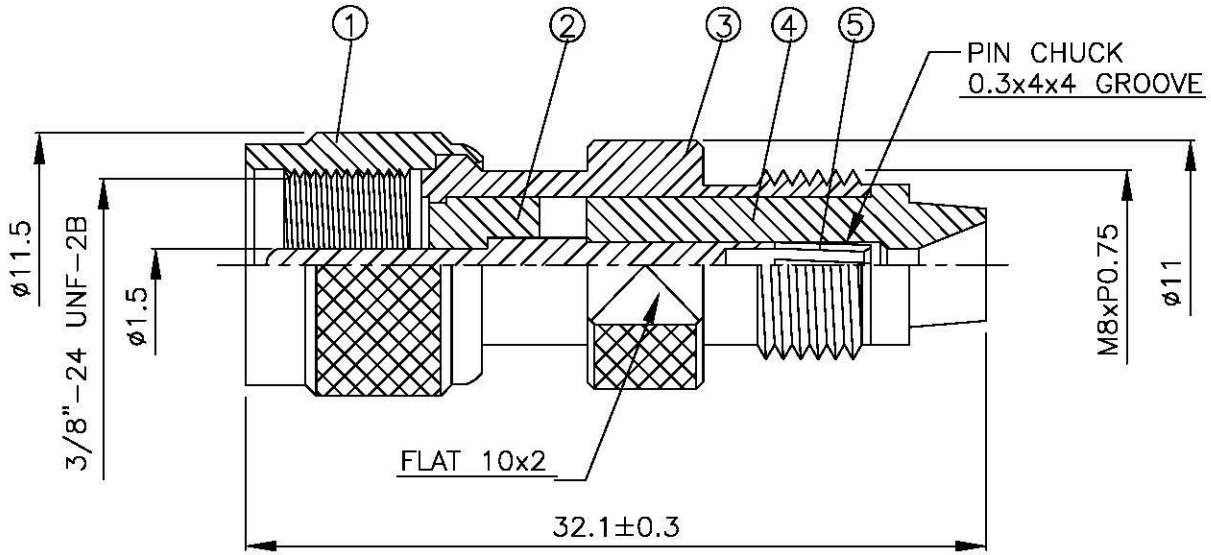

All Connectors

www.allconnectors.de
Tel.: 0049 711 7008901
70734 Fildersstadt - Germany
info@allconnectors.de
Fax: 0049 711 7008901
Kettemerstr. 25

TITLE FME FEMALE - Mini UHF MALE ADAPTOR

PART NO. FME-20-DGN

DRAWING NO. FME 20 DGN

DRAWN	MARY	DATE	96.07.07
CHECKED	蘇志欣	DATE	
Q.A.	蘇姿潔	DATE	
APPROVAL	徐燦霖	DATE	
REVISION		DATE	

DIMENSIONS ARE IN MILLMETERS

UNLESS OTHERWISE SPECIFIED TOLERANCE

0.5-5=±0.2 120-315=±1
5-30= ±0.4 315-1000=±1.6
30-120±0.6 1000-2000=±2.4

SCALE 4:1 SIZE A

REVISION	
DESCRIPTION	ENGINEER