NO	DESCRIPTION	MATERIAL	Q'TY	FINISH	REMARK
1	NUT	BRASS	1	NICKEL	N-0067-N
2	BODY 1	BRASS	1	NICKEL	B-N1492-N
3	WASHER 1	BRASS	1	NICKEL	W-0083-N
4	RUBBER	SI RUBBER	1	RUBBER	RU-0052
5	WASHER 2	BRASS	1	NICKEL	W-0085-N
6	INSULATION	TEFLON	1	TEFLON	I-0361T
7	PIN	BRASS	1	GOLD	P-BNC0521-G
8	WASHER 3	BRASS	1	NICKEL	W-0014-N
9	INSULATION	TEFLON	1	TEFLON	I-0088T
10	GASKET	RUBBER	1	RUBBER	RU-0006
11	WASHER	BRASS	1	NICKEL	W-0001-N
12	NUT	BRASS	1	NICKEL	N-0003-N

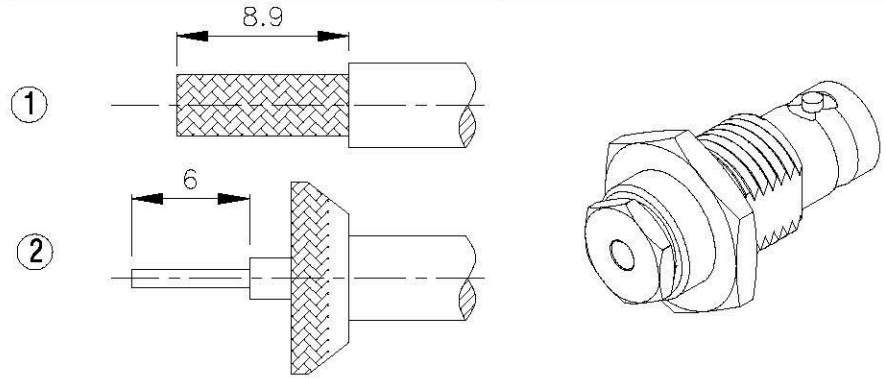

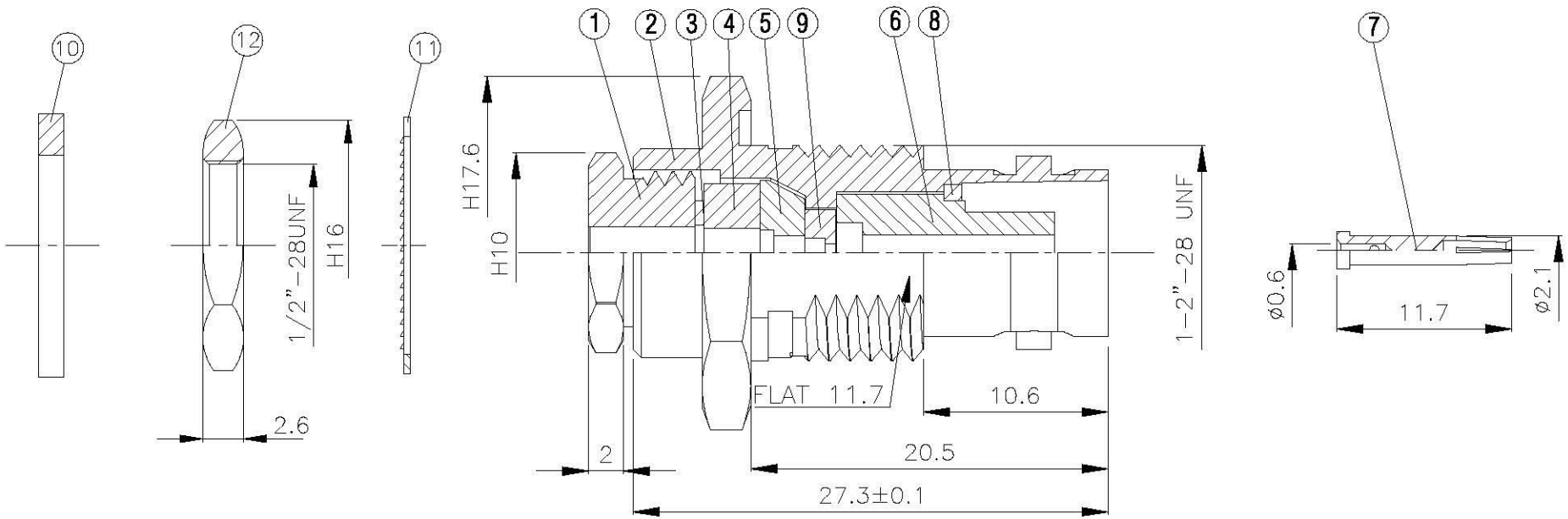

All Connectors

www.allconnectors.de info@allconnectors.de
Tel.: 0049 711 7000501 Fax: 0049 711 7000504
70794 Filderstadt - Germany Kettemerstr. 25

TITLE BNC FEMALE 4 HOLES CLAMP FOR RG-174/U,316/U

PART NO. BNC-06LV1-TGN-2

DRAWING NO. BNC 06LV1 TGN-2

DRAWN	蘇姿潔	DATE	98.10.13
CHECKED	蘇志欣	DATE	
Q.A.	林妙樺	DATE	
APPROVAL	徐燦霖	DATE	
REVISION		DATE	

DIMENSIONS ARE IN MILLMETERS

UNLESS OTHERWISE SPECIFIED TOLERANCE

0.5-5=±0.2	120-315=±1
5-30= ±0.4	315-1000=±1.6
30-120=±0.6	1000-2000=±2.4

SCALE 4:1 SIZE A

REVISION

DESCRIPTION	ENGINEER

(Recommended Stripping Dimmension)