NO	DESCRIPTION	MATERIAL	Q'TY	FINISH
1	SHELL	BRASS	1	NICKEL
2	BODY 1	BRASS	1	NICKEL
3	GASKET	SI RUBBER	1	RUBBER
4	WASHER	BRASS	1	NICKEL
5	SPRING	SK-5	1	NICKEL
6	WASHER	BRASS	1	NICKEL
7	INSULATION	DELRIN	1	DELRIN
8	PIN	BRASS	1	GOLD
9	BODY 2	BRASS	1	NICKEL
10	WASHER	BRASS	1	NICKEL
11	INSULATION	TEFLON	1	TEFLON
12	RING	BRASS	1	NICKEL

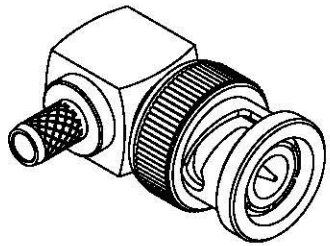

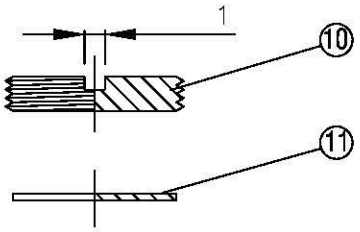

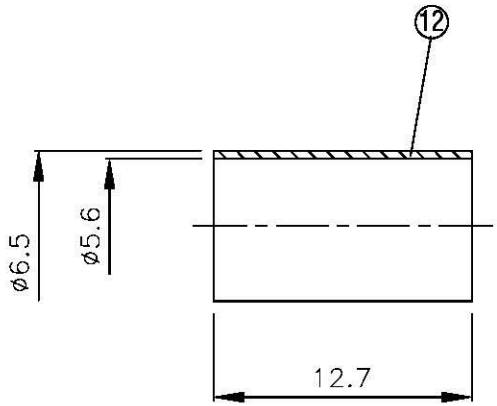

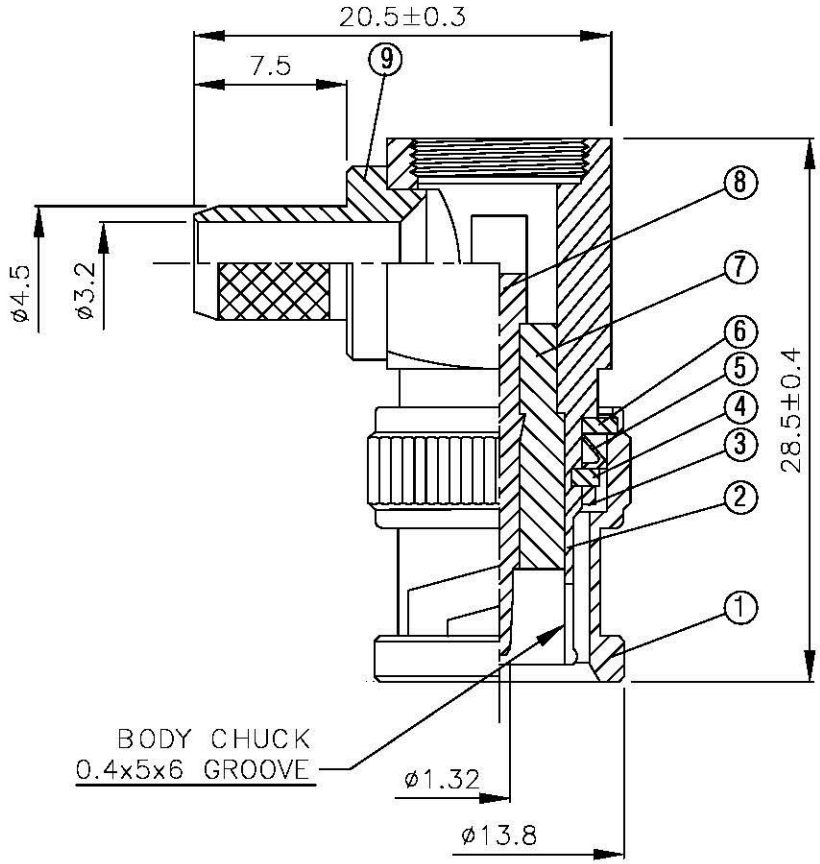

All Connectors

www.allconnectors.de info@allconnectors.de
Tel.: 0049 711 7005503 Fax: 0049 711 7005504
70794 Filderstadt Germany Rottenburgstr. 25

TITLE BNC MALE ANGLE CRIMP FOR RG58U,58A/U,141A/U

PART NO. BNC-02FV1-DGN

DRAWING NO. BNC 02FV1 DGN

DRAWN	MARY	DATE	96.07.24
CHECKED	蘇志欣	DATE	
Q.A.	蘇姿潔	DATE	
APPROVAL	徐燦霖	DATE	
REVISION		DATE	

DIMENSIONS ARE IN MILLMETERS

UNLESS OTHERWISE SPECIFIED TOLERANCE

0.5-5=±0.2 120-315=±1

5-30=±0.4 315-1000=±1.6

30-120=±0.6 1000-2000=±2.4

SCALE	4:1	SIZE	A

REVISION	
DESCRIPTION	ENGINEER