NO	DESCRIPTION	MATERIAL	Q'TY	FINISH	REMARK
1	BODY 1	BRASS	1	GOLD	B-BMA1267-G
2	WASHER	SUS304	1	ZINC	W-0081-Z
3	BODY 2	SUS303	1	PASSIVATED	B-BMA1265-SUS
4	BODY 3	BECU	1	GOLD	B-BMA1262-G
5	WASHER	SUS304	1	ZINC	W-0082-Z
6	INSULATION	TEFLON	1	TEFLON	I-0604T
7	PIN	BECU	1	GOLD	P-BMA0209-G
8	PIN	BRASS	1	GOLD	P-BMA0670-G

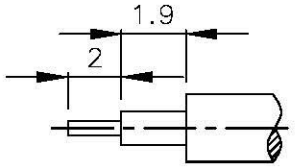

(Recommended Stripping Dimmension)

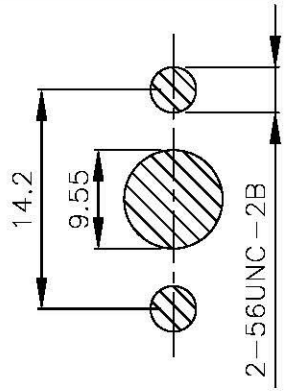

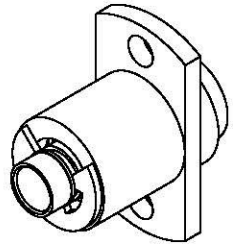

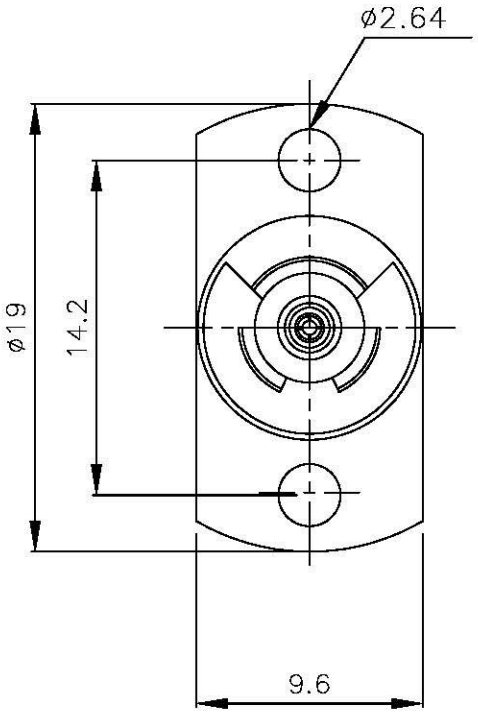

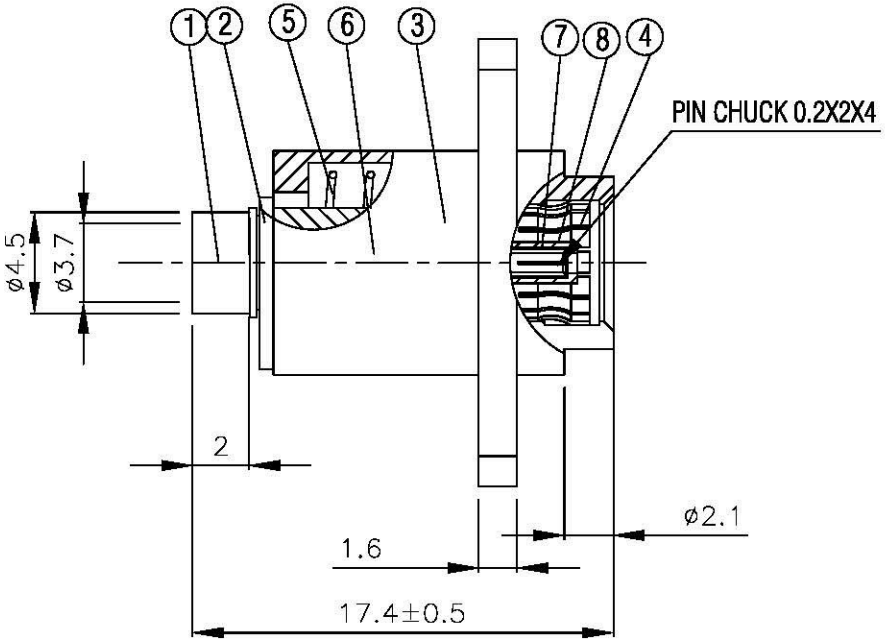

All Connectors www.allconnectors.de Tel.: 0049 711 7000503 70794 Filderstadt Germany info@allconnectors.de Fax: 0049 711 7000504 Kettemerstr. 25	DRAWN MARY	DATE 97.01.10	DIMENSIONS ARE IN MILLMETERS
TITLE BMA FEMALE SOLDER FOR RG-402/U(EPOXY)	CHECKED 蘇志欣	DATE	UNLESS OTHERWISE SPECIFIED TOLERANCE 0.5-5=±0.2 120-315=±1 5-30= ±0.4 315-1000=±1.6 30-120=±0.6 1000-2000=±2.4
PART NO. BMA-13V2-TGG	Q.A. 蘇姿潔	DATE	
DRAWING NO. BMA-13V2-TGG	APPROVAL 徐燦霖	DATE	SCALE 2:1 SIZE A
	REVISION	DATE	

REVISION	
DESCRIPTION	ENGINEER