NO	DESCRIPTION	MATERIAL	Q'TY	FINISH	REMARK
1	GASKET	SI RUBBER	1	RUBBER	RU-0040
2	BODY 1	BRASS	1	NICKEL	B-7161540-N
3	BODY 2	BRASS	1	SILVER	B-7161538-S
4	PIN 1	BRASS	1	SILVER	P-7161036-S
5	INSULATION 1	TEFLON	1	TEFLON	I-0694T
6	PIN 2	BRASS	1	SILVER	P-7161038-S
7	INSULATION 2	TEFLON	1	TEFLON	I-0695T
8	BODY 3	BRASS	1	SILVER	B-7161545-S
9	GASKET	SI RUBBER	1	RUBBER	RU-0030
10	PIN	BRASS	1	GOLD	P-BMA0690-G

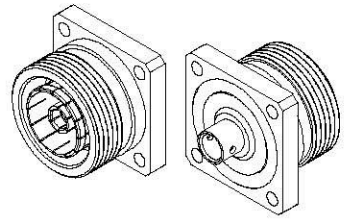

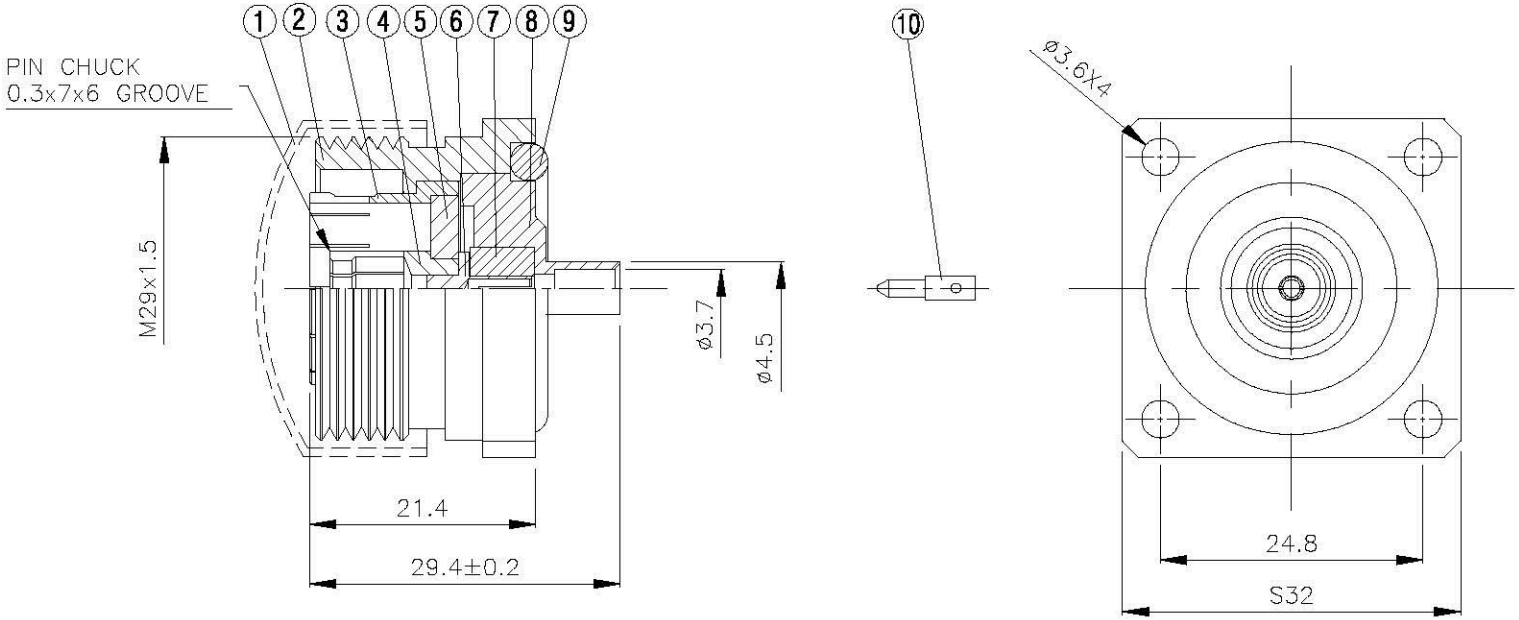

All Connectors
www.allconnectors.de
Tel.: 0049 711 7003503
70704 Filderstadt - Germany
info@allconnectors.de
Fax: 0049 711 7003504
Ilettemerstr. 25

TITLE 7/16 JACK 4 HOLES
PANEL MOUNTED FOR RG-402/U(.141)

PART NO. 716-07V2-TSS-2

DRAWING NO. 716-07V2-TSS-2

DRAWN	蘇志欣	DATE	98.12.25
CHECKED	蘇姿潔	DATE	
Q.A.	莊千慧	DATE	
APPROVAL	徐燦霖	DATE	
REVISION		DATE	

DIMENSIONS ARE IN MILLMETERS

UNLESS OTHERWISE SPECIFIED TOLERANCE

0.5-5=±0.2	120-315=±1
5-30= ±0.4	315-1000=±1.6
30-120±0.6	1000-2000=±2.4

SCALE 4:1 SIZE A

REVISION	
DESCRIPTION	ENGINEER