NO	DESCRIPTION	MATERIAL	Q'TY	FINISH	REMARK
1	BODY 1	BRASS	1	NICKEL	B-3501550-N
2	INSULATION	TEFLON	1	TEFLON	I-0697T
3	PIN	BE CU	1	GOLD	P-3501050-G
4	BODY 2	BRASS	1	GOLD	B-2401512-G

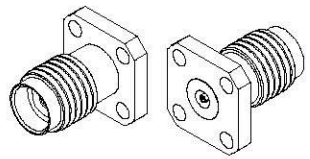

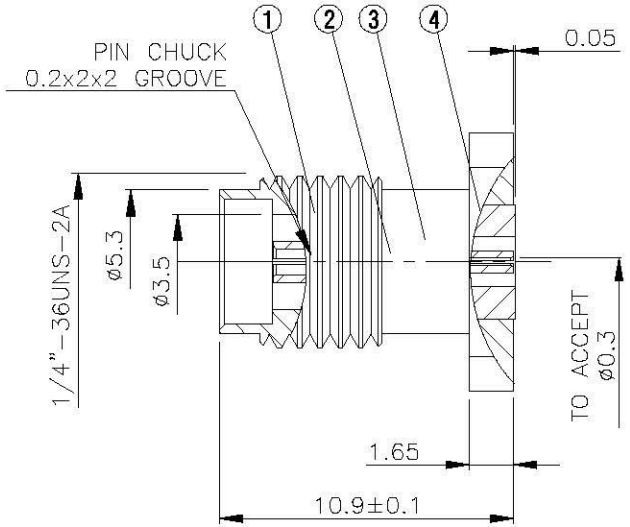

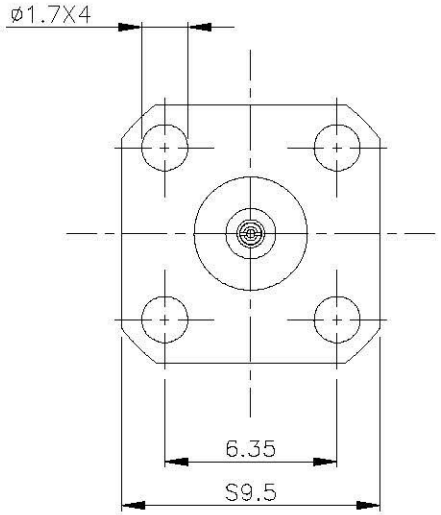

All Connectors

TITLE 350 FEMALE 4 HOLE MOUNT TO ACCEPT ø0.3

PART NO. 350-01V5-TGN-1

DRAWING NO. 350-01V5-TGN-1

DRAWN	蘇志欣	DATE	99.01.19
CHECKED	蘇姿潔	DATE	
Q.A.	林妙樺	DATE	
APPROVAL	徐燦霖	DATE	
REVISION		DATE	

DIMENSIONS ARE IN MILLMETERS

UNLESS OTHERWISE SPECIFIED TOLERANCE

0.5-5=±0.2 120-315=±1

5-30= ±0.4 315-1000=±1.6

30-120±0.6 1000-2000=±2.4

SCALE 4:1 SIZE A

REVISION	
DESCRIPTION	ENGINEER