NO	DESCRIPTION	MATERIAL	Q'TY	FINISH	REMARK
1	BODY 1	SUS303	1	PASSIVATED	B-2401516-SUS
2	INSULATION	UPE	1	UPE	I-0688P
3	PIN	BE CU	1	GOLD	P-2401028-G
4	BODY 2	BRASS	1	GOLD	B-2401512-G

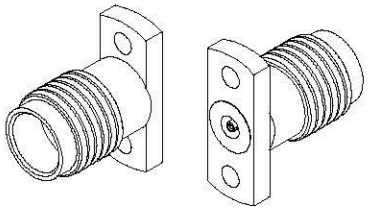

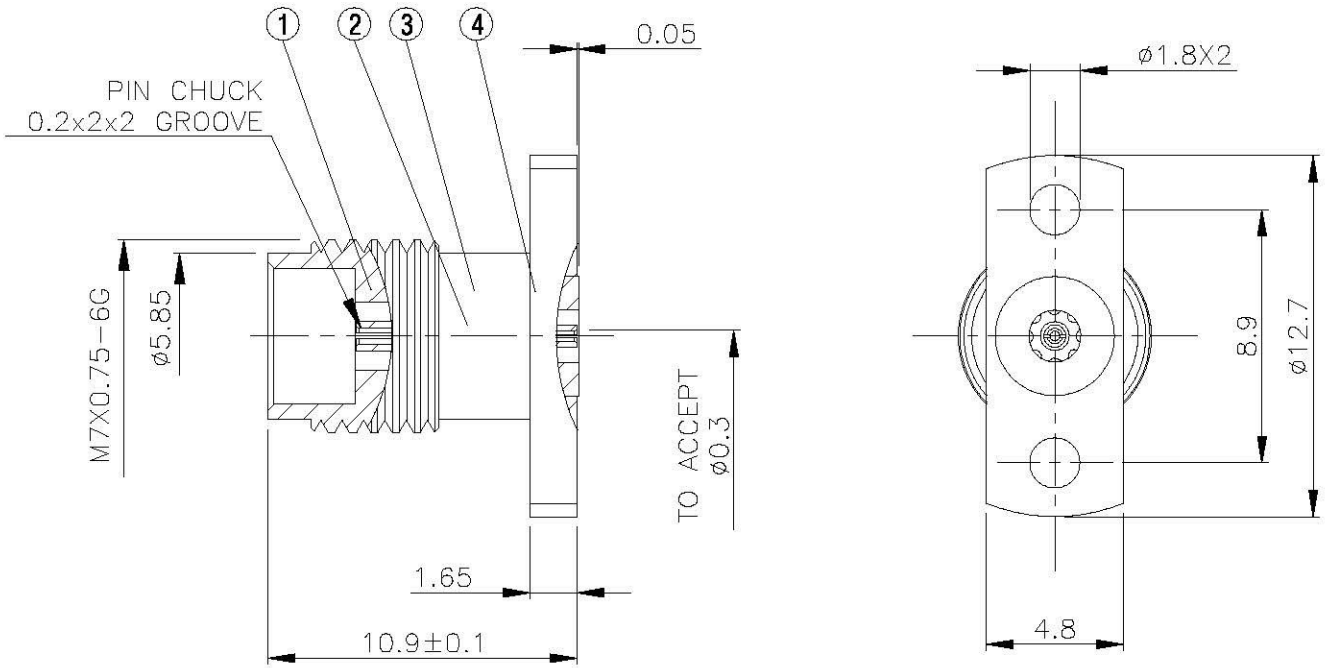

All Connectors	DRAWN 蘇志欣	DATE 98.11.12	DIMENSIONS ARE IN MILLMETERS
www.allconnectors.de Info@allconnectors.de	CHECKED 蘇姿潔	DATE	UNLESS OTHERWISE SPECIFIED TOLERANCE
TITLE 240 FEMALE 2 HOLE MOUNT TO ACCEPT ø0.3	Q.A. 林妙樺	DATE	0.5-5=±0.2 120-315=±1
PART NO. 240-02V6-PGSUS-1	APPROVAL 徐燦霖	DATE	5-30= ±0.4 315-1000=±1.6
DRAWING NO. 240-02V6-PGSUS-1	REVISION	DATE	30-120=±0.6 1000-2000=±2.4
			SCALE 4:1 SIZE A

REVISION	
DESCRIPTION	ENGINEER