NO	DESCRIPTION	MATERIAL	Q'TY	FINISH
1	BODY 1	BRASS	1	NICKEL
2	BODY 2	BRASS	1	GOLD
3	INSULATION	TEFLON	1	TEFLON
4	PIN	PH.BRONZE	1	GOLD
5	NUT	BRASS	1	NICKEL
6	WASHER	BRASS	1	NICKEL
7	INSULATION	TEFLON	1	TEFLON

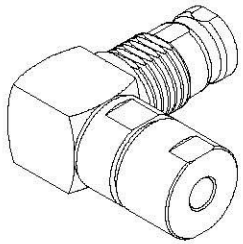

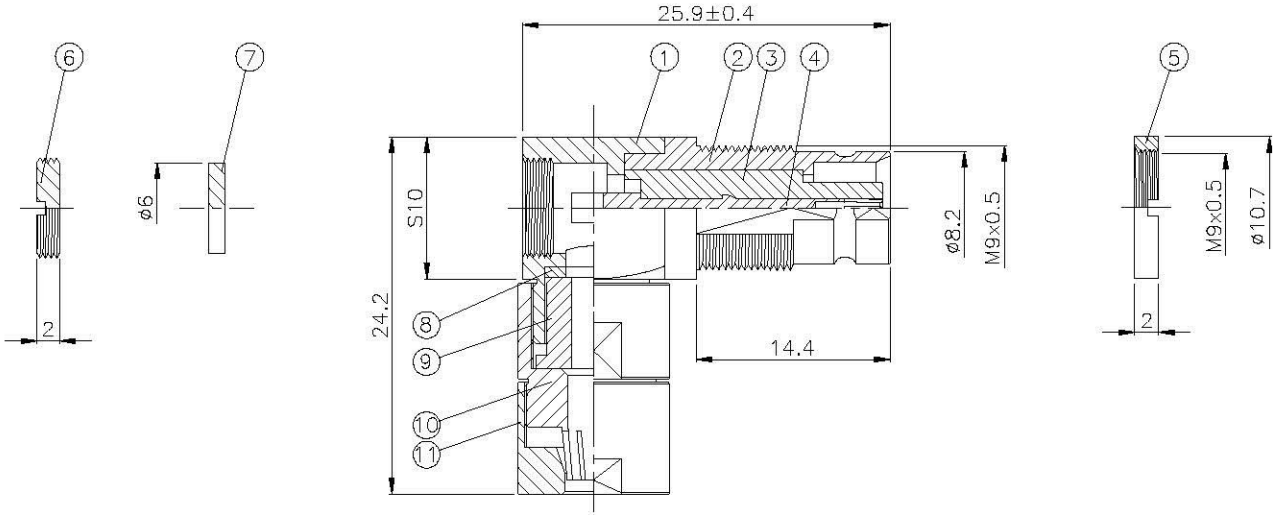

All Connectors

www.allconnectors.de
Tel.:0049 /31 /006046
70794 Filderstadt Germany
info@allconnectors.de
Fax:0049 /31 /006041
Kolbenstr.nr. 25

TITLE 1.6/5.6 FEMALE ANGLE CLAMP FOR RG-179/U

PART NO. 1656-102N-TGN

DRAWING NO. 1656 102N TGN

DRAWN	MARY	DATE	96.08.26
CHECKED	蘇志欣	DATE	
Q.A.	蘇姿潔	DATE	
APPROVAL	徐燦霖	DATE	
REVISION		DATE	

DIMENSIONS ARE IN MILLMETERS

UNLESS OTHERWISE SPECIFIED TOLERANCE

0.5-5=±0.2	120-315=±1
5-30=±0.4	315-1000=±1.6
30-120=±0.6	1000-2000=±2.4

SCALE 4:1 SIZE A

REVISION	
DESCRIPTION	ENGINEER